MONOGRAM 30" BUILT-IN SINGLE OVEN

ZTS90DPSZSS



TRUE EUROPEAN CONVECTION WITH DIRECT AIR
Powerful air circulation distributes heat evenly around food for exceptional baking and roasting performance.

BRILLIANT 7" LCD DISPLAY
Easily adjust oven settings on a vibrant, customizable display that allows you to personalize your wallpaper, check weather updates, manage multiple timers, maintain a shared shopping list and connect your phone via Bluetooth to play music right from your oven.

INTEGRATED COOKING CONTENT
Discover recipe inspiration, guided cooking experiences and expert culinary tips from trusted partners like King Arthur Baking — helping you build confidence and get more from your oven.

DIGITAL RECIPE BOX
Elevate your culinary creativity with the digital recipe box, allowing you to save your favorite recipes directly to the oven screen or the SmartHQ™ app. Store recipes from popular food websites or upload photos of your handwritten recipes for effortless access and organization.

PRECISION COOKING MODES
Master new recipes and perfect favorite dishes from prime rib to salmon using this ultra-smart system that automatically tracks cooking progress, modifies temperatures and adjusts cook times.

MORE WAYS TO MASTER EVERY MEAL
A full suite of premium cooking modes— from Slow Roast to No-Preheat Air Fry — delivers more capability in one beautifully integrated appliance.

EFFORTLESS SMART CONTROL
Enhance your wall oven with seamless remote access through the SmartHQ™ app, along with real-time alerts and over-the-air updates designed to help your oven continue improving over time. Plus, voice control through Alexa or Google Home adds hands-free convenience to everyday cooking.

See Installation Instructions for detailed instructions

MONOGRAM



SPECIFICATIONS

Overall Width	29 3/4" (75.6 cm)
Overall Height	28 11/16" (728 cm)
Overall Depth Including Handle	27 5/16" (70.6 cm)
Oven Door Clearance	20 9/16" (52.2 cm)
Overall Oven Interior Capacity	5.0 cu. ft. (141.6 liters)
Oven Interior Dimensions (W x H x D)	25" x 17 3/8" x 20 1/4" (63.5 x 44.1 x 51.4 cm)
Minimum Cabinet Width*	30" (76.2 cm)
Minimum Cabinet Depth*	24" (61.0 cm)
Minimum Base Support	220 lbs. (99 kg)
Cutout Width*	28 1/2" (72.4 cm) Min 28 5/8" (72.7 cm) Max
Cutout Height*	27 1/4" (69.2 cm) Min 27 5/16" (69.4 cm) Max
Cutout Depth*	23 1/2" (59.7 cm) Min
Volts/Hertz/Amps	240/208 V AC, 60 Hz, 20A
Conduit Length	40"
Electrical Rating	3.4 kW at 208V 4.5 kW at 240V
Shipping Weight	184 lbs. (84 kg)

* Additional space will be needed for flush installation.

ATTENTION ELECTRICIAN:

A 240/208V, 60Hz, 20 Amp circuit is required. An individual properly grounded branch circuit or circuit breaker is required. Hardware junction box is required for built-in product.

OVERALL DIMENSIONS

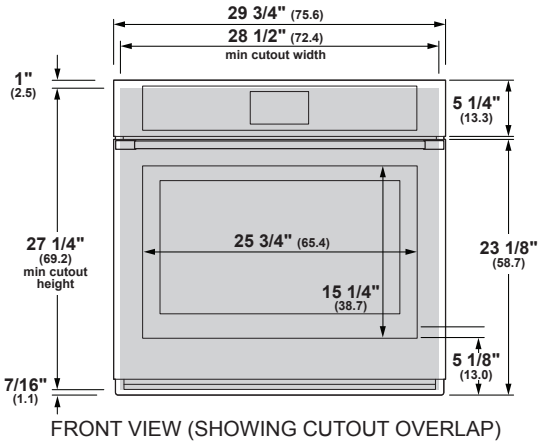

FRONT VIEW (SHOWING CUTOUT OVERLAP)

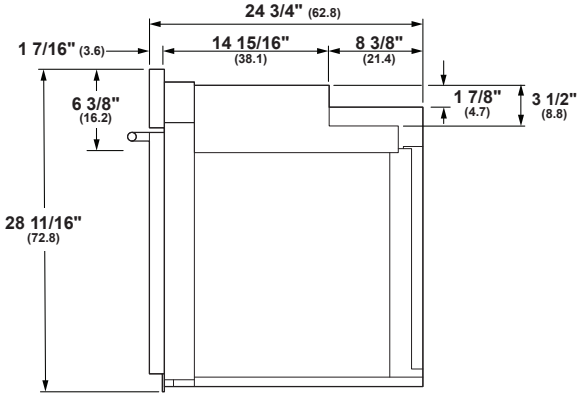

SIDE VIEW

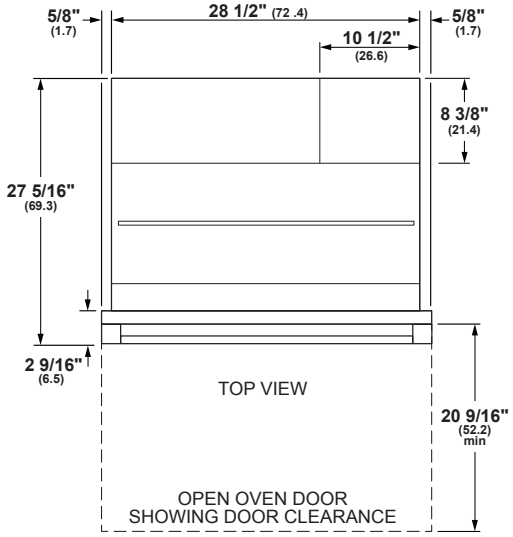

TOP VIEW

Dimensions in parentheses are in centimeters unless otherwise noted. Actual product dimensions may vary due to manufacturing tolerances.

MONOGRAM

HELPFUL TIPS

A Junction box location

B Platform must be able to support 220 lbs (99 kg)

C Minimum 31 1/4" from the top surface of the countertop to the top surface of the wall oven support platform when installed beneath a certified cooktop

UNDERCOUNTER INSTALLATION

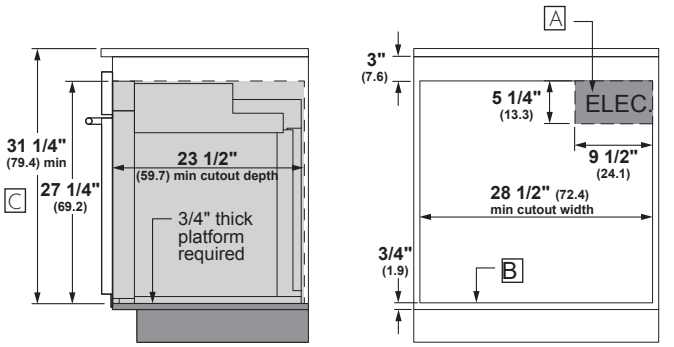

STANDARD INSTALLATION

STANDARD INSTALLATION FRONT VIEW

For more details, refer to the installation instructions for this product on Monogram.com.
Dimensions in parentheses are in centimeters unless otherwise noted.

MONOGRAM

INSTALLATION WITH ADVANTIUM AND WARMING DRAWER

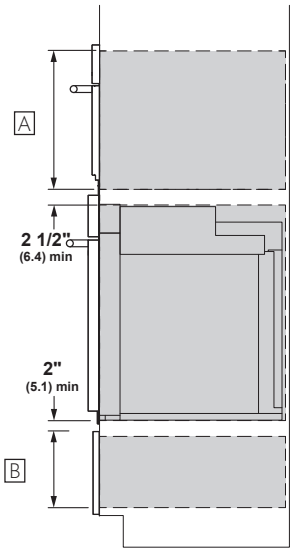

STANDARD INSTALLATION
SIDE VIEW

SIDE-BY-SIDE INSTALLATION

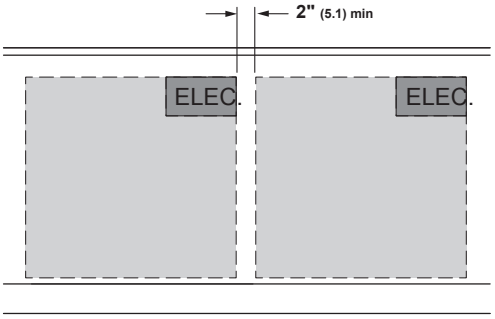

SIDE-BY-SIDE INSTALLATION
FRONT VIEW OF CUTOUTS

UNDER COOKTOP INSTALLATION

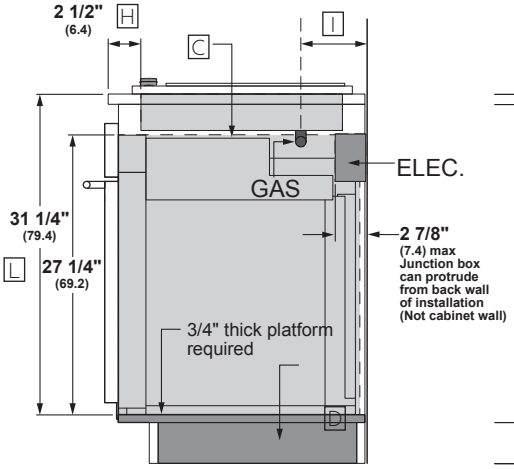

STANDARD INSTALLATION
SIDE VIEW

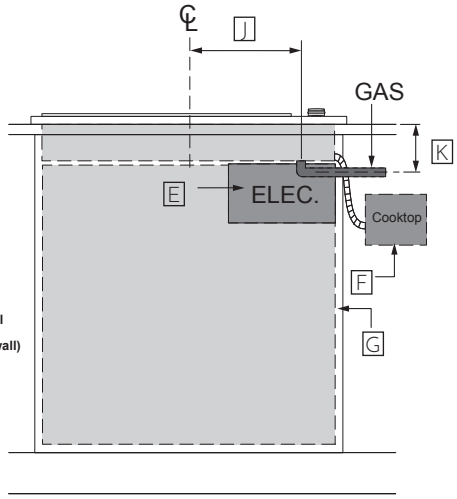

FRONT VIEW

HELPFUL TIPS

A Dimensions per Advantium or Microwave Oven requirements

B Dimension per Warming Drawer requirements

C Note: This oven is only approved to be installed under specific models as labeled on this unit

D Support platform made of 3/4" (1.9 cm) wood is required. Must be capable of supporting 220 lbs (99 kg). Support Platform base to be same height as toe kick

E Junction box location for wall oven.

F Gas regulator and electric connections for cooktops must be located in an adjacent accessible location to the right

G Top and/or side fillers may be necessary if unit is positioned between existing cabinets. Be sure they are attached securely, since they will anchor the oven in the cabinet

H For flush oven installations, the cooktop cutout must be set back 2 1/2" (6.4 cm) plus the cleat setback

I Dimension varies based on model. Example:
ZGU36 5 1/2" (14.0 cm) (from wall)
ZGU30 4 5/16" (11.0 cm) (from wall)

J Dimension varies based on model. Example:
ZGU36 0" (centerline)
ZGU30 12 1/16" (30.6 cm) (centerline)

K Dimension varies based on model. ZGU36: 5 1/2" (13.9 cm) requires use of a 90° 1/2" FPT x 1/2" FL brass street elbow ZGU30: 5" (12.7 cm)

L From the top surface of the countertop to the top surface of the wall oven support platform

For more details, refer to the installation instructions for this product on Monogram.com.
Dimensions in parentheses are in centimeters unless otherwise noted.