U-LINE

USER GUIDE + SERVICE MANUAL

Model: URWC424-IS01A

USER GUIDE & SERVICE MANUAL

Click on any section below to jump directly there

Table of Contents

Intro

Safety

Safety and Warning

Disposal And Recycling

Installation

Environmental Requirements

Electrical

Side by Side Installation

Anti-Tip Bracket

General Installation

Integrated Panel Dimensions

Grille Installation

Integrated Panel Installation

Door Swing

Door Stop

Door Adjust

Maintenance

Cleaning

Cleaning Condenser

Extended Non-Use

Operating Instructions

First Use

Control Operation

Airflow and Product Loading

Recommended Wine Storage

Service

Troubleshooting

Wire Diagram

Product Liability

Parts

R600a Specifications

System Diagnosis Guide

Compressor Specifications

Troubleshooting Extended

Thermistor

Defrost

Warranty

Welcome to U-Line

Congratulations on your U-Line purchase! At U-Line, we pride ourselves on delivering quality appliances that are visually elevated. Our blend of functionality, beautiful aesthetics, and inspired innovations ensures that every detail, no matter how small, contributes to a superior product experience. Our versatile applications span residential indoors and outdoors, marine, and commercial settings. Our diverse product line includes a wide variety of ice machines and refrigeration driven by design since 1962.

U-Line creates products designed for a modern lifestyle – beautiful and functional refrigeration that properly preserves food, beverages, and wine. With a focus on seamless integration and designer preferred features, U-Line speaks to those seeking a refined aesthetic. Featuring the simplest panel installation in the industry with fully integrated adjustable grille capabilities, U-Line is redefining the industry standard on integration—making our products Built-In to Stand Out®. Since joining the Middleby family of brands in 2014, we have continued to innovate and redefine the refrigeration landscape.

Thank you for your support,

U-Line
Right Product. Right Place. Right Temperature.®

Product Information

Looking for additional information on your product? User Guides, Spec Sheets, CAD Drawings, and Product Warranty information are available digitally on u-line.com.

Property Damage and Injury Concerns

In the unlikely event property damage or personal injury is suspected related to a U-Line product, please take the following steps:

1. Our customer service team must be contacted immediately at +1.616.754.5601.
2. Service or repairs performed on the product without prior written approval from our factory is not permitted. If the product has been altered or repaired in the field without prior written approval, claims will not be eligible.

Reach Out

Middleby Refrigeration
1260 E Van Deinse
Greenville, MI 48838
+1.616.754.5601
customerservice@middlebyrefrigeration.com

Let's Connect
@ulinecorp | u-line.com

Safety and Warning

NOTICE
Please read all instructions before installing, operating, or servicing the appliance.

Use this appliance for its intended purpose only and follow these general precautions with those listed throughout this guide:

SAFETY ALERT DEFINITIONS

Throughout this guide are safety items labeled with a Danger, Warning, or Caution based on the risk type:

⚠ DANGER

Danger means that failure to follow this safety statement will result in severe personal injury or death.

⚠ WARNING

Warning means that failure to follow this safety statement could result in serious personal injury or death.

⚠ CAUTION

Caution means that failure to follow this safety statement may result in minor or moderate personal injury, property, or equipment damage.

Caution: risk of fire, flammable refrigerant and blowing gas used.

GENERAL PRECAUTIONS

Use this appliance for its intended purpose only and follow these general precautions with those listed throughout this guide.

This appliance is not intended for use by persons (including children) with reduced physical, sensory or mental capabilities, or lack of experience or knowledge, unless they have been given supervision or instruction concerning use of the appliance by a person responsible for their safety.

Children should be supervised to ensure that they do not play with this appliance.

⚠ WARNING

Keep clear of obstruction all ventilation openings in the appliance enclosure or in the structure for building-in.

Please accord to local regulations regarding disposal of the appliance for its flammable refrigerant and blowing gas. Before you scrap the appliance, please remove the doors to prevent child entrapment.

Do not store explosive substances such as aerosol cans with a flammable propellant in this appliance.

⚠ WARNING

Do not use mechanical devices or other means to accelerate the defrosting process, other than those recommended by the manufacturer.

⚠ WARNING

Do not damage the refrigerating circuit.

⚠ WARNING

Do not use electrical appliances inside the food/ ice storage compartments unless they are of the type recommended by the manufacturer.

DO NOT use medical devices or other means to accelerate the defrosting process other than those recommended by the manufacturer. DO NOT use an ice pick or other sharp instrument to help speed up defrosting. These instruments can puncture the inner lining or damage the cooling unit. DO NOT use any type of heater to defrost. Using a heater to speed up defrosting can cause personal injury and damage to the inner lining.

NOTICE

Do not lift unit by door handle.

Never install or operate the unit behind closed doors. Be sure front grille is free of obstruction. Obstructing free airflow can cause the unit to malfunction and will void the warranty.

Failure to clean the condenser every six months can cause the unit to malfunction. This could void the warranty.

Allow unit temperature to stabilize for 24 hours before use.

Do not block any internal fans.

Use only genuine factory replacement parts. Imitation parts can damage the unit, affect its operation or performance and may void the warranty.

This indoor/outdoor appliance is intended to be used in household and similar applications such as:

- Staff kitchen areas in shops, offices and other working environments.
- Farm houses and by clients in hotels, motels and other residential type environments.
- Bed and breakfast type environments.
- Catering and similar non-retail applications.
- Covered outdoor patios/kitchens within a temperature range of 50°F (10°C) to 100°F (38°C).

Disposal and Recycling

DANGER

RISK OF CHILD ENTRAPMENT. Before you throw away your old refrigerator or freezer, take off the doors and leave shelves in place so children may not easily climb inside.

If the unit is being removed from service for disposal, check and obey all federal, state, and local regulations regarding the disposal and recycling of refrigeration appliances, and follow these steps completely:

1. Remove all consumable contents from the unit.
2. Unplug the electrical cord from its socket.
3. Remove the door(s)/drawer(s).

Environmental Requirements

This unit supports indoor and outdoor operation within a temperature range of 50°F (10°C) to 100°F (38°C). Higher ambient temperatures may reduce the unit's ability to reach low temperatures and/or reduce ice production on applicable models.

For best performance, keep the unit out of direct sunlight and away from heat generating equipment.

In climates where high humidity and dew points are present, condensation may appear on outside surfaces. This is considered normal. The condensation will evaporate when the humidity drops.

⚠ CAUTION

Damages caused by ambient temperatures of 40°F (4°C) or below are not covered by the warranty.

Electrical

ELECTRICAL WARNINGS

⚠ WARNING

Never remove the round grounding prong from the plug and never use a two-prong grounding adapter.

⚠ WARNING

Altering, cutting or removing power cord, removing power plug, or direct wiring can cause serious injury, fire, loss of property and/or life, and will void the warranty.

⚠ WARNING

Never use an extension cord to connect power to the unit.

⚠ WARNING

Always keep your working area dry.

⚠ WARNING

Electrical connections should be performed only by a certified professional. Electrical and grounding connections must comply with the applicable portions of the National Electric Code and/or all local electric codes. Failure to comply with this procedure can cause property damage, injury, or death.

⚠ WARNING

Make sure all facility electrical connections comply with all local and federal electrical code regulations.

⚠ WARNING

Electrical connections or any work required on the electrical circuits inside the appliance must be performed by certified technicians in compliance with local, state, and federal regulations.

⚠ WARNING

Before connecting the unit to the electrical supply, verify that the electrical and grounding connections comply with the applicable portions of the National Electric Code and/or other local electrical codes. Failure to comply with this procedure can cause property damage, injury, or death.

⚠ WARNING

Before connecting the unit to the electrical supply, verify that the electrical connection agrees with the specifications on the data plate. Failure to comply with this procedure can cause property damage, injury, or death.

⚠ WARNING

Appliance must be connected to a grounded, metal, permanent wiring system. Or an equipment-grounding conductor must be run with the circuit conductors and connected to the equipment-grounding terminal or lead on the appliance. Failure to comply with this procedure can cause property damage, injury, or death.

⚠ WARNING

Appliances equipped with a flexible electric supply cord, are provided with a three-prong grounding plug. This plug must be connected into a properly grounded three-prong receptacle. Failure to comply with this procedure can cause property damage, injury, or death.

⚠ WARNING

If the receptacle is not the proper grounding type, contact an electrician. Do not remove the grounding prong from the plug. Failure to comply with this procedure can cause property damage, injury, or death.

NOTICE

Electrical installation must observe all state and local codes. This unit requires connection to a grounded (three-prong), polarized receptacle that has been placed by a qualified electrician.

ELECTRICAL LOCKOUT/TAGOUT PROCEDURE

⚠ WARNING

Before removing any sheet metal panels, always perform the Electrical LOCKOUT/TAGOUT Procedure. Be sure all circuits are disconnected. Failure to comply with this procedure can cause property damage, injury, or death.

⚠ WARNING

Before performing any service that involves electrical connection or disconnection and/or exposure to electrical components, always follow the Electrical LOCKOUT/TAGOUT Procedure. Disconnect all circuits. Failure to comply can cause property damage, injury or death.

The Electrical LOCKOUT/TAGOUT Procedure is used to protect personnel working on an electrical appliance. Before performing any maintenance or service that requires exposure to electrical components, follow these steps:

1. **In electrical box, place appliance circuit breaker into OFF position.**
2. **Place a lock or other device on electrical box cover to prevent someone from placing circuit breaker ON.**
3. **Place a tag on electrical box cover to indicate that appliance has been disconnected for service and power should not be restored until tag is removed by maintenance personnel.**
4. **Disconnect appliance power cord from electrical outlet.**
5. **Place a tag on the cord to indicate that unit has been disconnected for service and power should not be restored until tag is removed by maintenance personnel.**

The unit requires a grounded and polarized 208 – 220 VAC, 60 Hz, 30A power supply (normal household current). An individual, properly grounded branch circuit or circuit breaker is recommended. A GFCI (ground fault circuit interrupter) is usually not required for fixed location appliances and is not recommended for your unit because it could be prone to nuisance tripping. However, be sure to consult your local codes.

See CUTOUT & PRODUCT DIMENSIONS for recommended receptacle location.

Side-by-Side Installation

OTHER SITE REQUIREMENTS

Side-by-Side Installation

Units must operate from separate, properly grounded electrical receptacles placed according to each unit's electrical specifications requirements.

Cutout width for a side-by-side installation is the total of the widths listed under Cutout Dimensions in each unit's Installation Guide. Each door can be opened individually (one at a time) without interference.

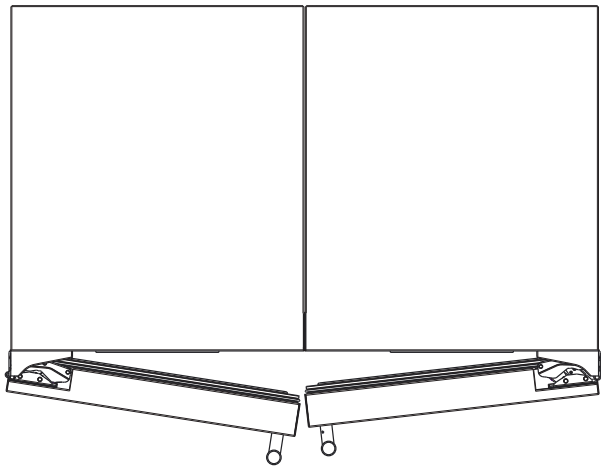

However, to ensure unobstructed door swing (opening both doors at the same time), 1/4" (6.4 mm) of space needs to be maintained between the units.

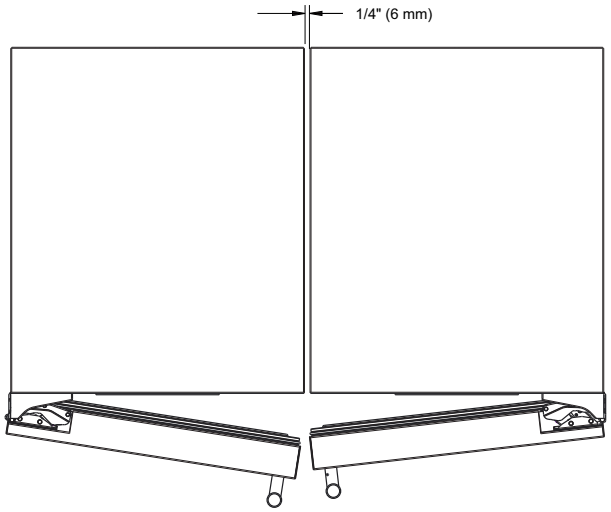

Hinge-by-Hinge Installation (Mullion)

When installing two units hinge-by-hinge, 13/16" (22 mm) is required for integrated models. Additional space may be needed for any knobs, pulls or handles installed.

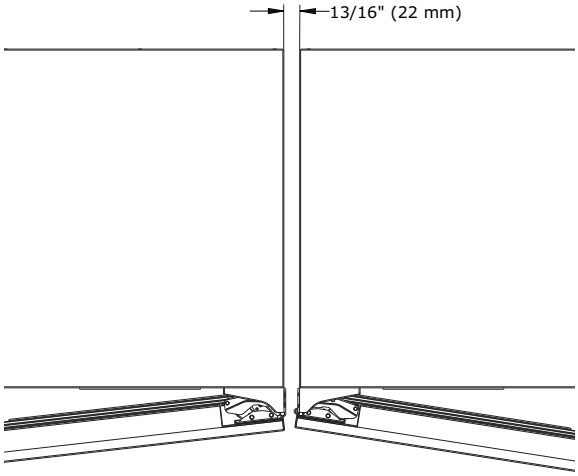

Stainless steel models which include the standard stainless handle will require 4-9/16" (116 mm) to allow both doors to open to 90° at the same time.

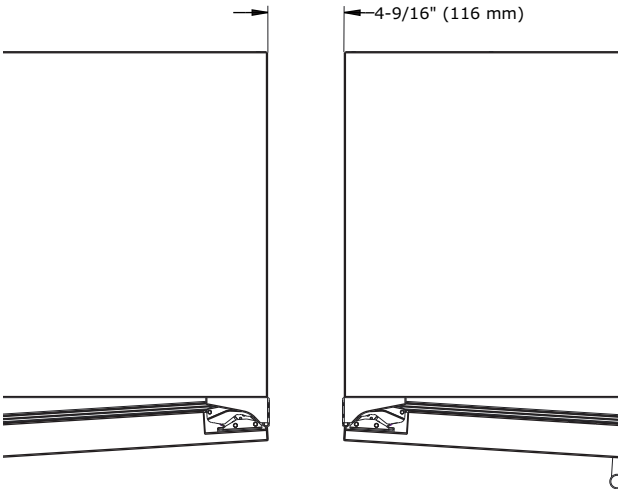

Anti-Tip Bracket

1. Slide unit out so screws on side of unit are easily accessible.

2. Locate the 3 holes on side of the unit.

3. Place bracket over holes and attach to unit with 3 of the screws provided with the bracket.

4. Repeat on the opposite side.

5. Gently push unit into position. Be careful not to entangle the electrical cord.

6. Check to be sure the unit is level from front to back and side to side. Make any necessary adjustments. The unit's top surface should be approximately ⅛" (3 mm) below the countertop.

7. Open door to access the holes in the bracket.

8. Use 3 provided screws to secure each bracket into adjoining surface.

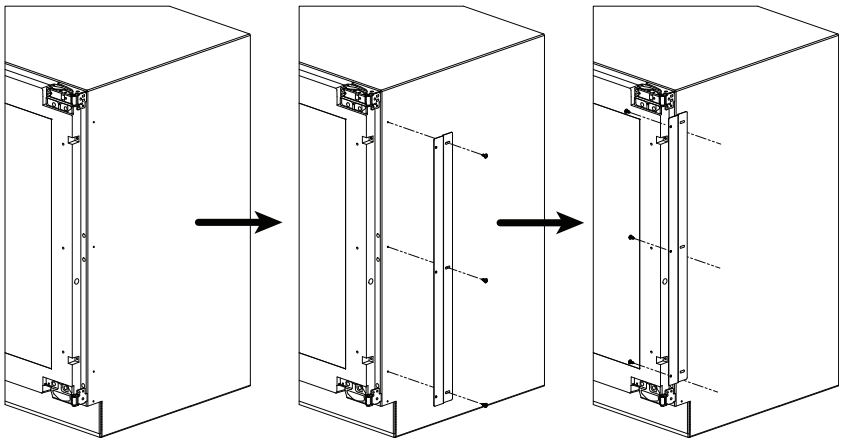

General Installation

LEVELING INFORMATION

1. Use a level to confirm the unit is level. Level should be placed along top edge and side edge as shown.

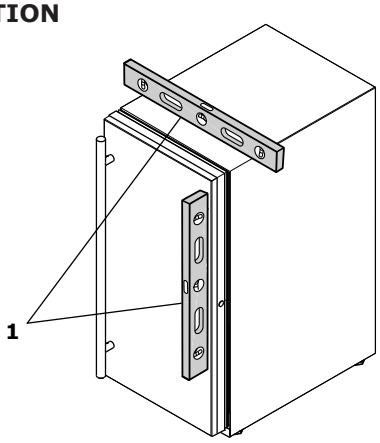

2. If the unit is not level, adjust the legs on the corners of the unit as necessary.

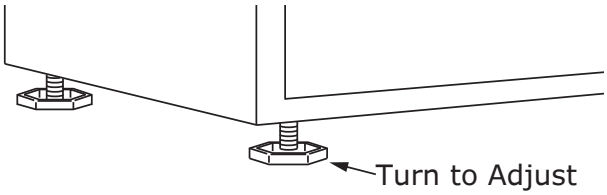

3. Confirm the unit is level after each adjustment and repeat the previous steps as needed.

INSTALLATION TIP

If the room floor is higher than the floor in the cutout opening, adjust the rear legs to achieve a total unit rear height of 1⁄8″ (3 mm) less than opening's rear height. Shorten the unit height in the front by adjusting the front legs. This allows the unit to be gently tipped into the opening. Readjust the front legs to level the unit after it is correctly positioned in the opening.

INSTALLATION

1. Plug in the power/electrical cord.
2. Gently push the unit into position. Be careful not to entangle the cord or water and drain lines, if applicable.
3. Re-check the leveling, from front to back and side to side. Make any necessary adjustments. The unit's top surface should be approximately 1⁄8″ (3 mm) below the countertop.
4. Remove interior packing material and wipe out the inside of the unit with a clean, water-dampened cloth.

Integrated Panel Dimensions

Metric measurements rounded and optimized.

INTEGRATED PANEL

NOTICE

Due to differences in surrounding cabinetry the panel may not perfectly align with door. The procedure below is designed to provide a finished integrated panel that seamlessly integrates with surrounding cabinetry.

Panel Preparation

A full integrated door panel completely covers the door frame and provides a built-in appearance.

NOTICE

The door panel must not weigh more than 20 lbs (10 kg).

It is important to ensure that all drilled holes are drilled to the correct depth in order to avoid splits in the wood when hardware is installed.

1. Cut the panels to the dimensions listed in the appropriate diagram below.

2. Optional: Stain or finish panel to desired stain or color. Be sure to closely follow the instructions provided by the manufacturer.

3. Optional: Install handles and hardware.

NOTICE

When applying an integrated panel to a unit, ensure that both sides are finished in order to prevent warping. In some overlay panel/frame installations, the panel may be visible through the glass while the door is open.

Integrated Panel Dimensions

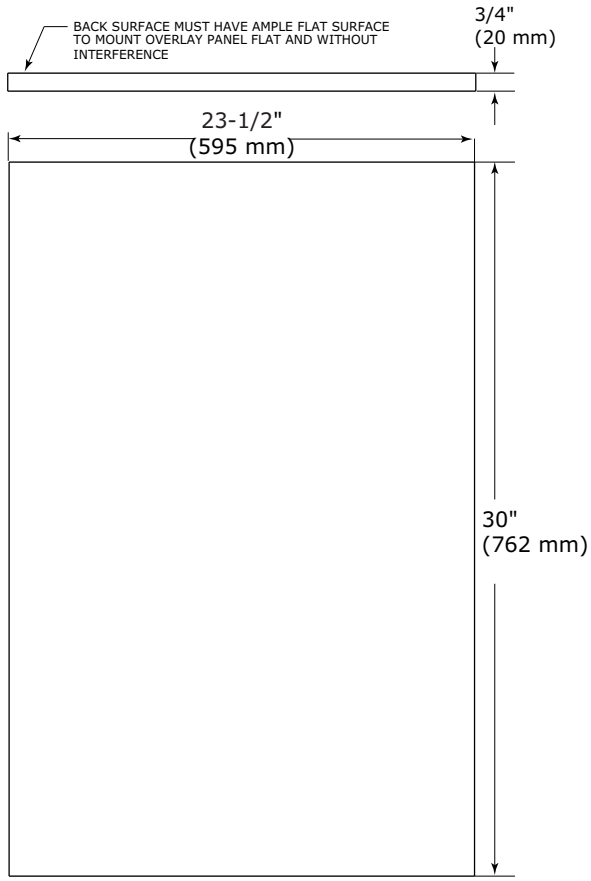

Integrated Panel

HANDLELESS INTEGRATED DOOR PANEL

The following procedure is designed to provide a finished, handleless solid panel for a 24" (600 mm) door that seamlessly integrates with its surrounding cabinetry.

NOTE: Many cabinet manufacturers provide a ready solution for a handleless, integrated design that can be easily applied to your model. Consult your cabinet manufacturer for applicable design and installation details. The cabinet manufacturer's solution to this design and integration detail will often result in an integrated panel solution wherein the size of the panel may result in a height dimension taller than what we specify. This can be achieved provided the additional height is positioned above the appliance door.

NOTICE

The integrated panel aligns with the surrounding cabinetry and, due to differences in cabinetry, may not align perfectly with the door.

The appliance will need up to 34-1/2" (876 mm) to the underside of the counter to leave room for leveling adjustments.

A single prepared overlay with insert must not weigh more than 20 lbs (10 kg).

Integrated Panel Preparation

1. Cut the main panel to the appropriate dimensions below. For details, see the drawings on the next page.

Main panel width	Main panel height
23-1/2" (595 mm)	28-13/16" (732 mm)

2. Create the top design for the handleless feature and the 1/8" (3 mm) notch for the insert(s) indicated on the Top Detail drawing.

3. Prepare the insert(s) that will back up the handleless design. **Wooden Insert –** Cut 1/8" (3 mm) thick wooden insert(s) to the dimensions below.

Wooden insert width	Wooden insert height
23-1/2" (595 mm)	3-1/2" (89 mm)

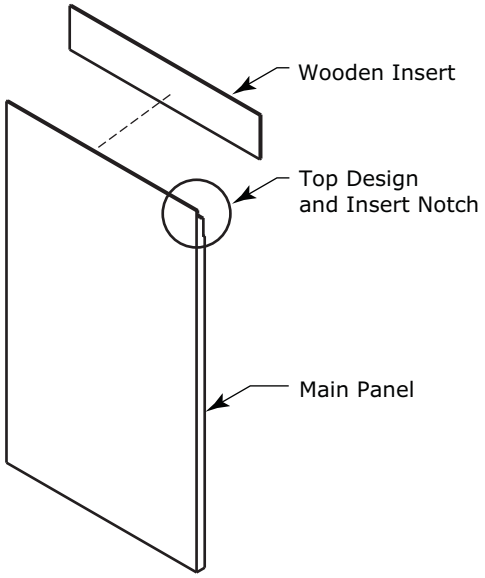

Integrated Panel

4. Optional: Stain or finish panel and wooden insert to desired stain or color. Be sure to closely follow the instructions provided by the manufacturer.

NOTICE

If finishing panel or wooden insert, all sides must be finished to prevent warping.

5. Attach the insert to the panel. Wood glue or equivalent adhesive should be used to attach insert to panel.

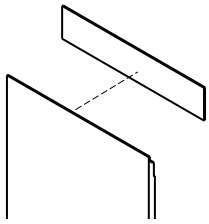

Attach Wooden Insert

Handleless Integrated Panel Dimensions

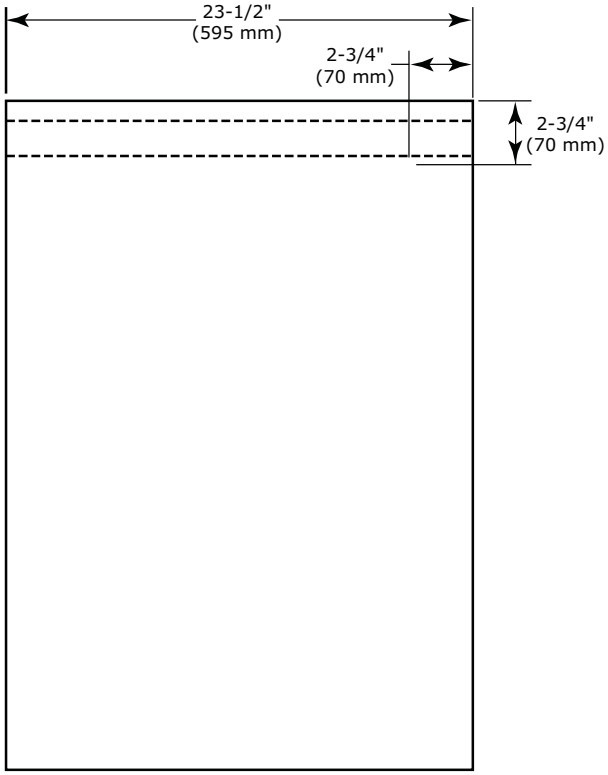

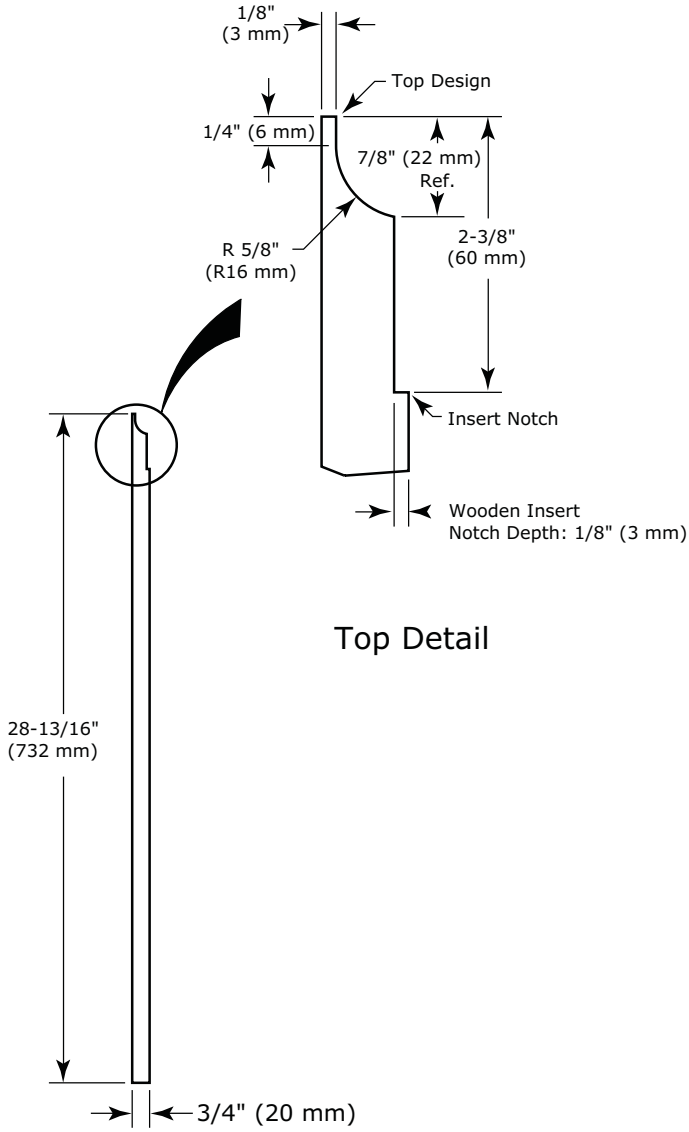

Wooden Insert Dimensions

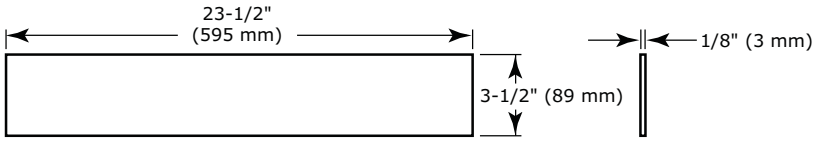

EXTENDED INTEGRATED PANEL

NOTICE

Due to differences in surrounding cabinetry the panel may not perfectly align with door. The procedure below is designed to provide a finished panel that seamlessly integrates with surrounding cabinetry.

Panel Preparation

An extended integrated panel can be used to maintain alignment with an adjacent extended cabinet height or a reduced toe-kick/grille application.

1. Cut the panels to the dimensions listed in the appropriate diagram on the next page.

2. Optional: Stain or finish panel to desired stain or color. Be sure to closely follow the instructions provided by the manufacturer.

3. Optional: Install handles and hardware.

NOTICE

The door panel must not weigh more than 20 lbs (10 kg).

It is important to ensure that all drilled holes are drilled to the correct depth in order to avoid splits in the wood when hardware is installed.

Appliance will need up to 34-1/2" (876 mm) to the underside of the counter to leave room for leveling adjustments.

When applying an integrated panel to a unit, ensure that both sides are finished in order to prevent warping. In some installations, the panel may be visible through the glass while the door is open.

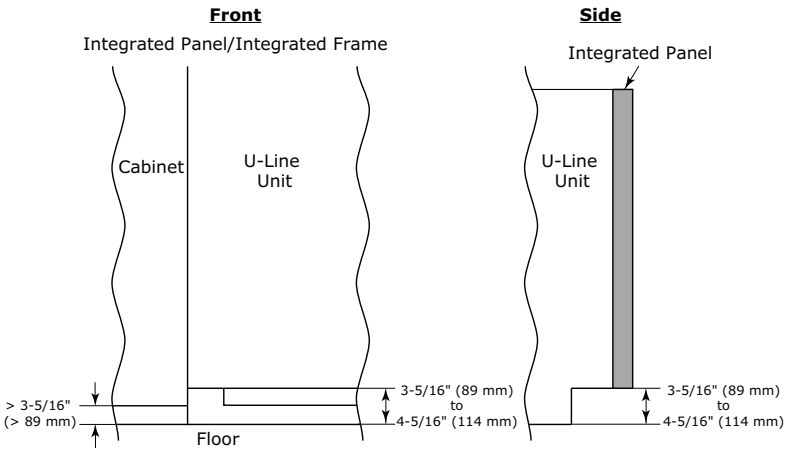

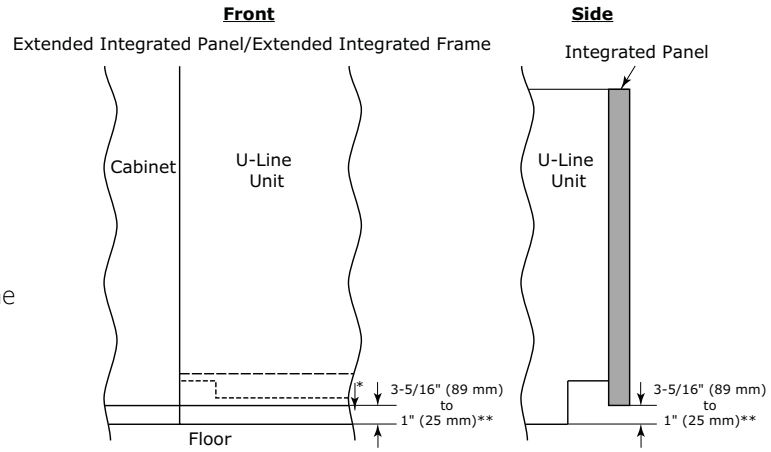

* Panel can extend beyond the door frame.

** A minimum of 1" (25 mm) from the floor is required for proper ventilation.

Extended Integrated Panel Dimensions

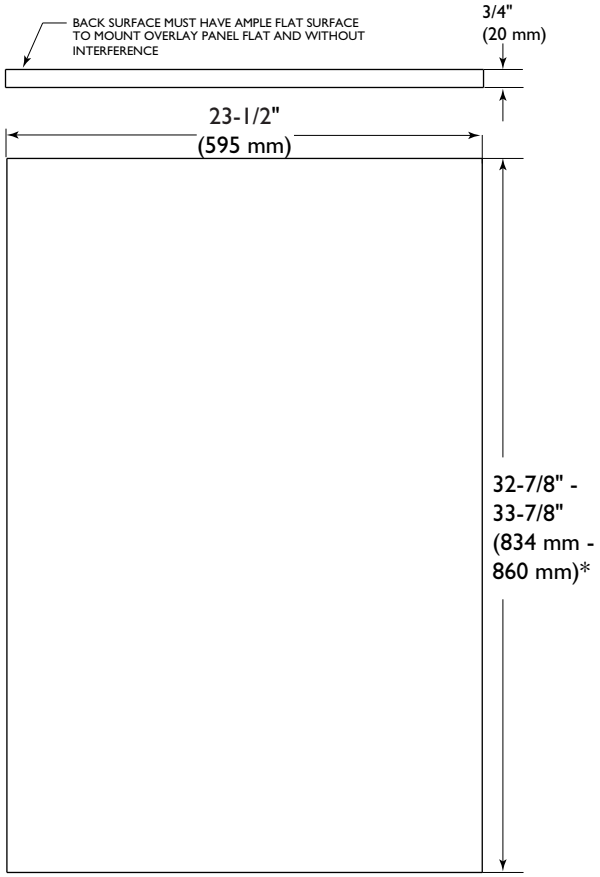

Integrated Panel

* A minimum of 1" (25 mm) is required from the floor to the bottom of the extended integrated panel/frame for proper ventilation.

Integrated Grille Dimensions

PREPARE AND INSTALL INTEGRATED GRILLE

1. Use the dimensions provided in the diagram to cut and shape your integrated grille panel. Recommended panel thickness is between 1/4” (6 mm) and 3/8” (9mm). Height will vary from 3-5/16” (84 mm) to 4-5/16” (110 mm) based on your grille height.

2. Finish or stain your grille panel to match your surrounding furniture. Finish front, back and edges to prevent warping. Carefully follow the manufacturer’s recommendations for finish application and cure times.

3. Apply double-sided tape to the backside of the integrated grille panel, along the outside edges. Use the diagram to the right for reference. U-Line recommends 3M™ VHB™ tape, a high strength bonding tape.

4. Remove backing paper from double-sided tape.

5. Carefully align grille over integrated panel and press firmly into position.

Apply Tape To Shaded Area

15” Models

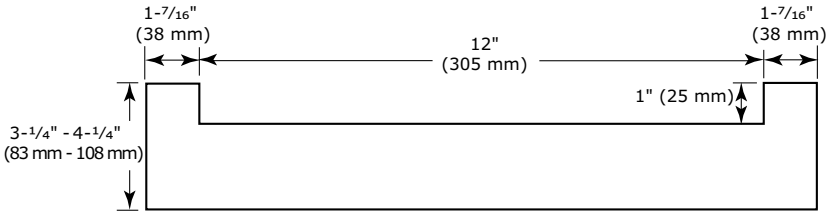

18” Models

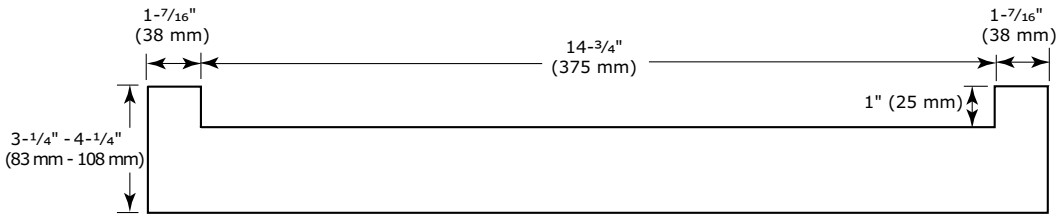

24” Models

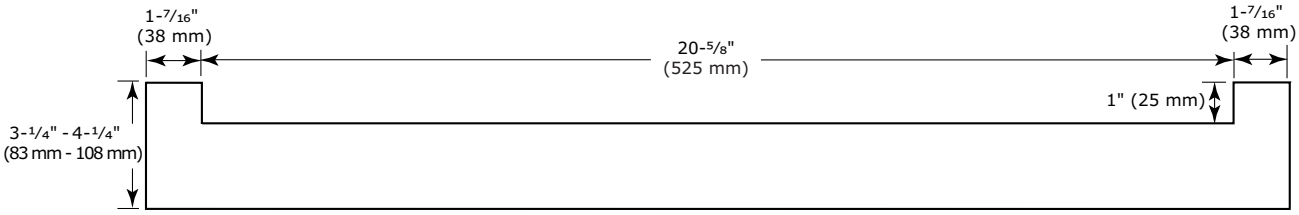

Integrated Panel Installation

1. Fully open door.

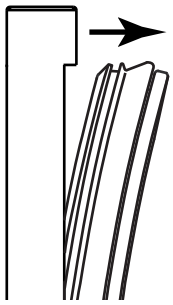

2. Starting at corner, pull gasket away from door.

3. Continue to pull gasket free from gasket channel.

4. Upon removal, lay gasket down on a flat surface.

5. Align top of panel with top edge of door. Center panel on door.

NOTICE

Due to differences in floor construction or surrounding cabinetry, the panel may not sit flush with the top of the door.

6. Secure integrated panel to door using clamps. A robust tape may also be used. U-Line recommends the use of bar clamps to secure the panel to the door. If using tape, be certain the tape will not damage panel finish upon removal.

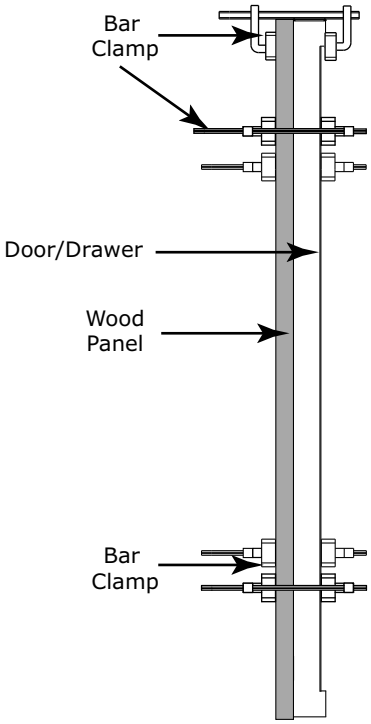

7. Using a 7/64" (3 mm) drill bit, drill 6 pilot holes into the wood panel 1/2" (12 mm) deep using the holes in the door frame as a guide.

NOTICE

It is important to ensure that all drilled holes are drilled to the correct depth in order to avoid splits in the wood when hardwood is installed.

8. Locate 6 of the #6x 1-1/2" (38 mm) screws provided with your unit.

9. Using a Phillips screwdriver, place one screw into each of the 6 pilot holes and screw down. Do not overtighten screws.

10. Ensure the screws sit flush against the bottom of the channel.

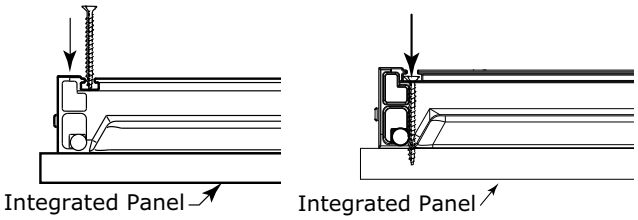

11. Remove clamps from door.

NOTICE

If panel requires additional adjustment after removing clamps, slightly loosen each screw and adjust panel as necessary. Tighten screws upon completion.

12. Starting at the corners, re-install the gasket into the gasket channel in the frame. Make sure the gasket is fully seated.

Integrated Grille Dimensions

PREPARE AND INSTALL INTEGRATED GRILLE

1. Use the dimensions provided in the diagram to cut and shape your integrated grille panel. Recommended panel thickness is between 1/4” (6 mm) and 3/8” (9mm). Height will vary from 3-5/16” (84 mm) to 4-5/16” (110 mm) based on your grille height.

2. Finish or stain your grille panel to match your surrounding furniture. Finish front, back and edges to prevent warping. Carefully follow the manufacturer’s recommendations for finish application and cure times.

3. Apply double-sided tape to the backside of the integrated grille panel, along the outside edges. Use the diagram to the right for reference. U-Line recommends 3M™ VHB™ tape, a high strength bonding tape.

4. Remove backing paper from double-sided tape.

5. Carefully align grille over integrated panel and press firmly into position.

Apply Tape To Shaded Area

15” Models

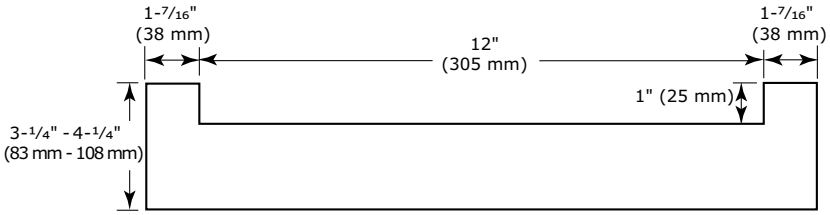

18” Models

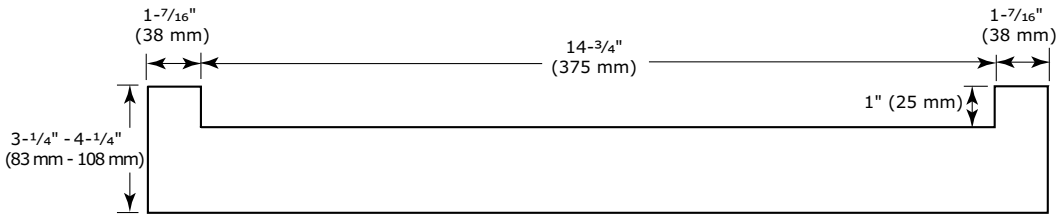

24” Models

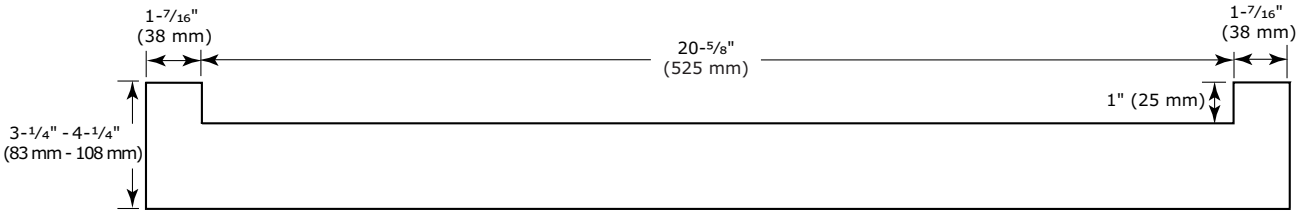

Grille Installation and Adjustment

REMOVING AND INSTALLING GRILLE

WARNING

Disconnect electric power to the unit before removing the grille.

When using the unit, the grille must be installed.

Removing the grille

1. Disconnect power to the unit.

2. Remove 2 screws accessible through the opening in the grille.

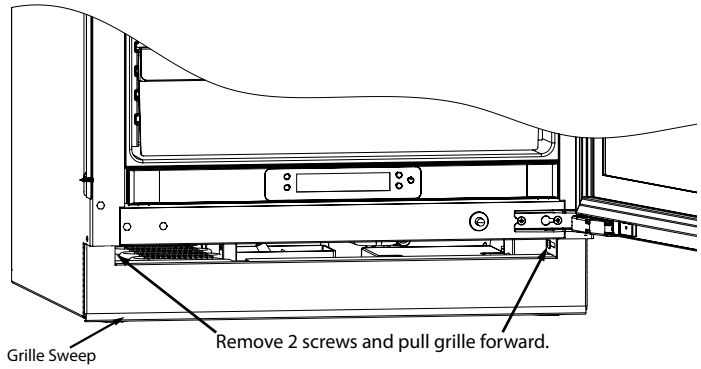

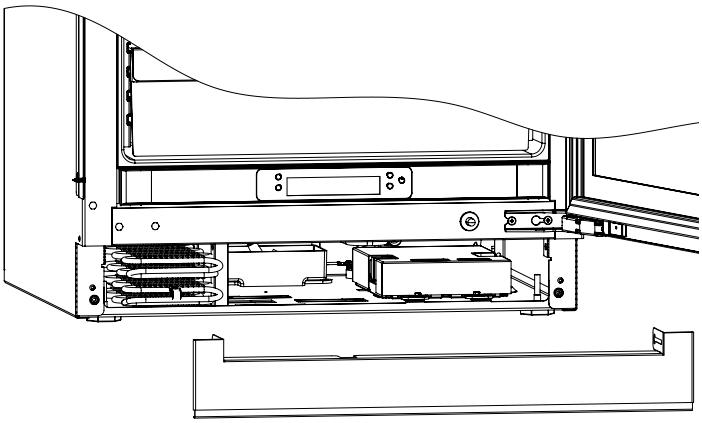

3. Remove grille and set asided. Hold on to the grille sweep as you remove the grille or it will fall loose.

Installing the grille

1. Align cabinet and grille holes and secure with 2 screws. Do not over tighten grille screws.

2. Connect power to the unit.

Adjusting the grille

1. Loosen, but do not remove 2 screws.

2. Pull out or push in grille to the desired depth. The grille sweep automatically adjusts, maintaining contact with the floor.

3. Tighten screws.

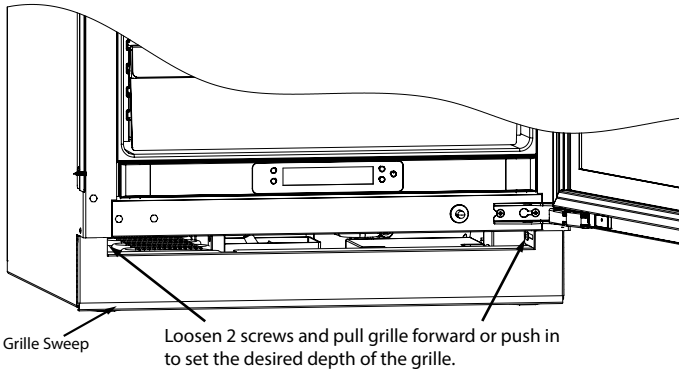

Door Swing

For Integrated models that are installed adjacent to a wall, 1/2" (13 mm) clearance is recommended from wall on hinge side to allow the door to open 90°. Allow for additional space for any knobs or pulls installed on the integrated panel/frame.

Stainless Steel models that are installed adjacent to a wall require 2-1/4" (57 mm) door clearance on hinge side to allow for door handle.

Units have a zero clearance when installed adjacent to cabinets.

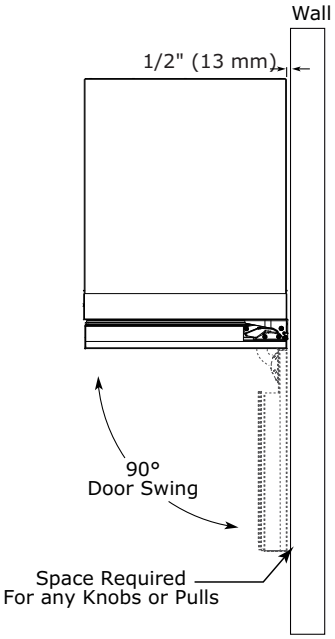

Integrated

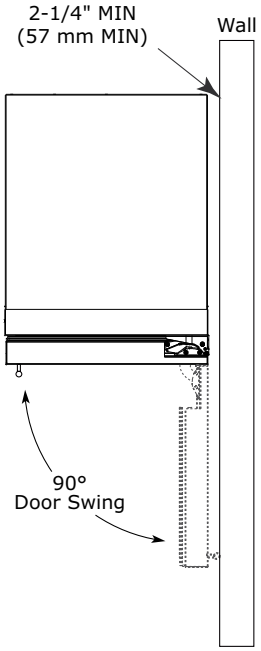

Stainless

Door Stop

Your U-Line unit was shipped to you with the optional 90° pin.

Your unit's door(s) will open 115° straight from the factory. If you would like the door stop at 90°, follow these instructions.

NOTICE

If your unit is already undercounter, it will need to be moved out to access the hinge.

1. Open door approximately 90°.
2. Slide hinge pin into hole as shown. Pin should slide into place, stopping the door at 90°; if the pin does not go into the hole shown, hold the door less than 90° open and try again.
3. To fully seat the pin, tap it lightly with a hammer.
4. Carefully slide your unit back in place.

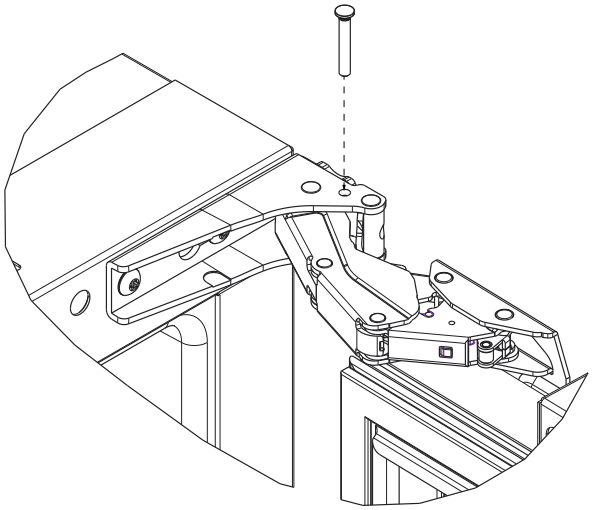

NOTICE

The pin can be removed to return the door swing back to its original 115° swing by tapping the pin out from the bottom of the hinge.

CLOSER

The door hinge has a self-closing feature that engages when the door is open approximately 6" (150 mm) (about 25°).

Door Adjustments

DOOR ALIGNMENT AND ADJUSTMENT

Align and adjust the door if it is not level or not sealing properly. If the door is not sealed, the unit may not cool properly, or excessive frost or condensation may form in the interior.

NOTICE
Properly aligned, the door's gasket should be firmly in contact with the cabinet all the way around the door (no gaps). Carefully examine the door's gasket to ensure that it is firmly in contact with the cabinet. Also make sure the door gasket is not pinched on the hinge side of the door.

⚠ CAUTION

Do not attempt to use the door to raise or pivot your unit. This would put excessive stress on the hinge system.

Alignment and Adjustment Procedure

1. Open door and remove gasket near the hinges.
2. Using a T-25 bit, loosen each pair of Torx head screws both the upper and lower hinge plates.
3. Square and align door as necessary.
4. Tighten Torx head screws on hinge.
5. Reinstall gasket into the channel starting at the corner.

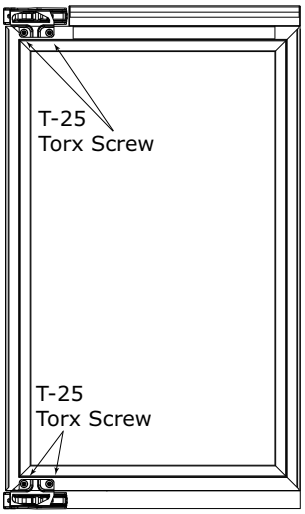

REVERSING THE DOOR

⚠ CAUTION

To prevent stripping or breaking the screws, do not use power tools during this procedure.

1. Open door.
2. Where the hinges attach to the machine, loosen, but do not remove the 2 Phillips screws on each hinge.

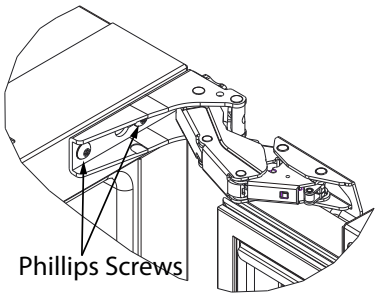

3. To remove the door, slide the door toward the outside of the unit until the door can be freely pulled forward. Set the door aside.
4. Remove all 4 Phillips screws.
5. On the non-hinge side of the unit, remove the 4 black hole plugs, and install them into the 4 holes on the opposite side.
6. Install the 4 Phillips screws on the side where the hinges will be installed. Do not drive the screws all the way in, but leave enough room for hinges to be slid on.
7. Rotate door 180º, align the hinges over the 4 screws, and slide into position.
8. Tighten all 4 screws.

ALIGN AND ADJUST THE DOOR

(see DOOR ALIGNMENT AND ADJUSTMENT).

First Use

Initial startup requires no adjustments. When plugged in, the unit will begin operating under the factory default settings. If the unit was turned off during installation, simply press ⏻ and the unit will immediately switch on. To turn the unit off, press ⏻.

NOTICE

Temperature displayed reflects actual temperature inside unit.

If the temperature displayed is different than selected, the unit is progressing towards the selected temperature. Time to reach set point varies based upon ambient temperature, temperature of product loaded, door openings, etc. U-Line recommends allowing the unit to reach set points before loading.

UI (User Interface) Home Screen Operation

SINGLE ZONE

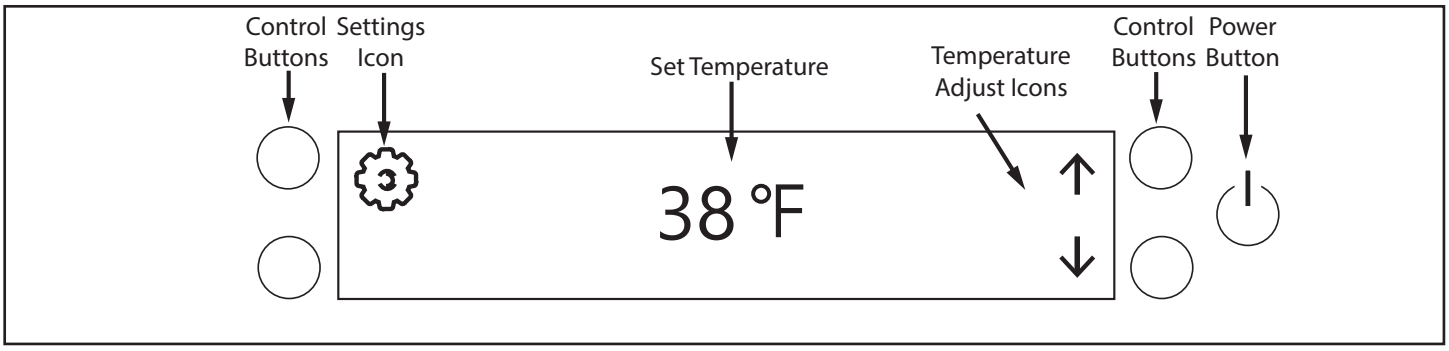

DUAL ZONE

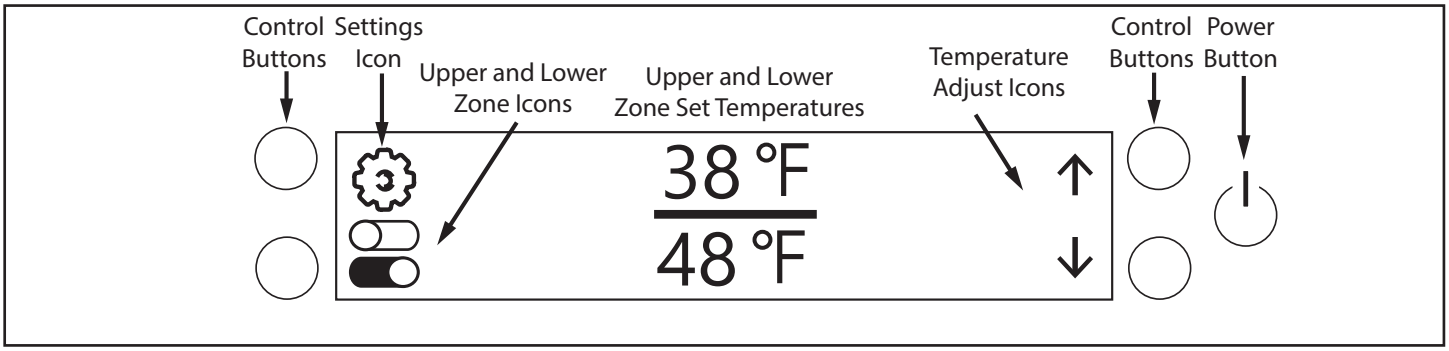

Operating the UI Home Screen

Power Button

- Press and hold the power button for 3 seconds to turn the unit on or off.

Control Buttons - (4)

- Pressing the control buttons affects the icons directly next to them on the display.

Set Temperature

- The temperature that the machine is set to - notice that the dual zone machine has two set temperatures displayed.

Adjusting the Set Temperature

- For SINGLE ZONE, press the control button next to the up or down temperature adjust icons to change the temperature.

1. For DUAL ZONE, press the up or down arrow to select the upper or lower temperature zone - the one selected, will begin to flash.
2. Use the up or down arrow to raise or lower the temperature.
3. Use the control button next to the zone icons to switch to the other zone.

Settings

- Enter the settings menu by pressing the control button next to the settings icon. Once in settings, it will be possible to make many adjustments to enhance the performance of your machine.

UI (User Interface) Settings Operation

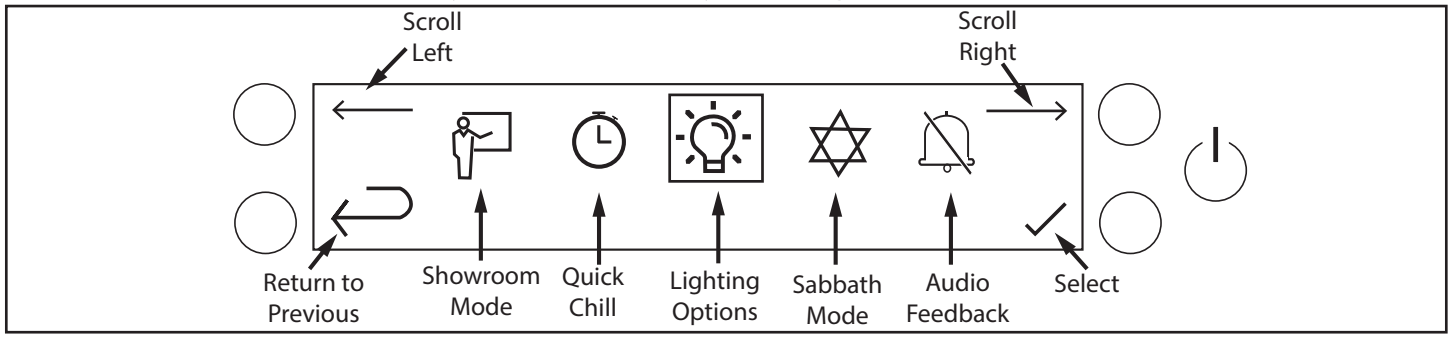

Navigating the Settings Screens*

- Use the scroll right or scroll left arrows to move the selection pane over the desired icon. Continuing to scroll to the right or left will reveal more available settings.
- When the desired setting is highlighted, press the control button next to ✓ .
- At any time, press ↩ to return to the previous menu or home screen.

***Not all settings are available on every unit - your unit will display only the ones available.**

Adjust the Settings

LIGHTING OPTIONS

1. With the lighting icon in the center of the display and highlighted, press the control button next to ✓ to view the lighting options menu.

- **Change Light Color**

1. Click on the control button next to . The door open/closed menu appears. This menu allows you to choose the color of light you would like when the door is open as well as when it is closed.

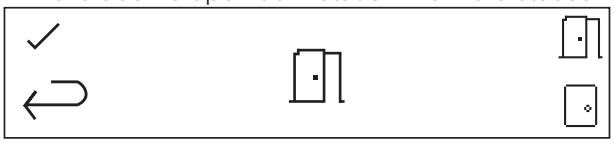

2. Select open or closed door - the one you choose will appear in the center of display - and press ✓ The light color menu appears with the current color number in the center.

3. Use the up or down arrows to scroll through the available lighting color options - see Color Choices chart to the right.
4. Once the desired color has been chosen, click on ✓ to lock it in. The lighting will remain this color until changed. Select ↩ once to return to lighting options, or twice to return to settings.

Color Choices

* When option 7 is selected, all 6 colors will cycle in ten-second intervals.

1	White
2	Warm White
3	Cool White
4	Blue
5	Light Blue
6	Teal
7	Color Flow*

- **Light On After Door Close** - to set the amount of time that the light remains on after the door is closed.

1. Press the control button next to the clock icon.

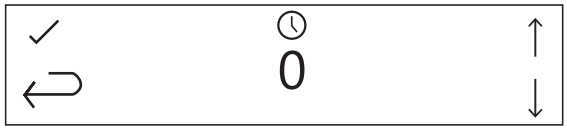

2. Press up or down to change the number of hours the interior lighting will remain on - the choices are **0hrs**, **6hrs**, or **12hrs** and **infinite** ∞.
3. Select ✓ and then press return.

- **Set Brightness**

1. Select from the Lighting Options menu.

2. Use up/down arrows to select **HIGH**, **MED**, or **LOW.**
3. Press ✓ to save selection. Press ↩ .

- **Quick Chill** - *Lowers the temperature of the cabinet to its lowest possible set point for 2 hours.*

1. Select from the settings menu. Select ON or OFF.

2. Press to save selection. Press .

- **Sabbath Mode**

1. Select from the settings menu.

2. Press the up or down arrow to turn ON or OFF. Press to save selection. Press .
3. To disengage Sabbath Mode, press and hold for 3 seconds any of the 4 control buttons. Pressing the power button will have no effect.

NOTICE

Sabbath Mode

The unit remains in Sabbath mode until disengaged.
DURING SABBATH MODE:

- The display immediately goes blank and remains this way until disengaged - see Step 3 above.
- The cabinet lights remain off.
- All audible alarms and alerts are inactive.
- Evaporator fans may not stop when door is opened.

- **Audio Feedback**

1. From the settings menu select .

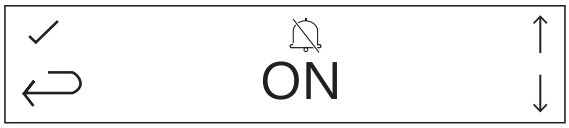

2. Select **ON** or **OFF**. Press to save selection. Press .

- **Change between Fahrenheit and Celsius**

1. From the settings menu select **F/C**.

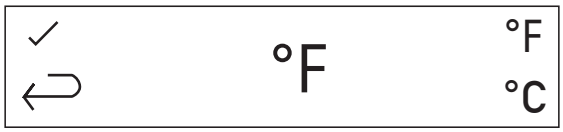

2. Select the desired setting. Press to save selection. Press .

- **UI Lock** - ***Prevents accidental changes.***

1. From the settings menu select .

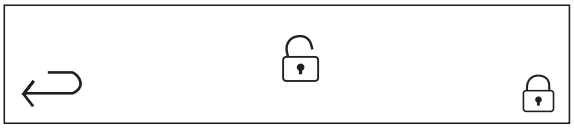

2. Press and hold for 5 seconds (a countdown will appear on the display). The display will automatically return to the home screen.

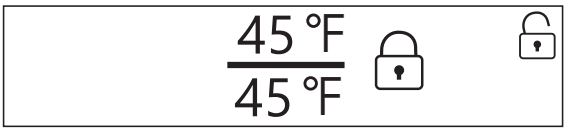

3. To unlock the UI, press and hold the open padlock icon for 5 seconds (a countdown will appear on the display).
   (Dual zone shows both temps, single zone shows one temp)

-

- **UI On with Door Closed**

1. Select from the settings menu.

2. Press the up or down arrow to turn ON or OFF. Press the checkmark to save selection. Press to save selection. Press .

- **Display Brightness**

1. Select from the settings menu.

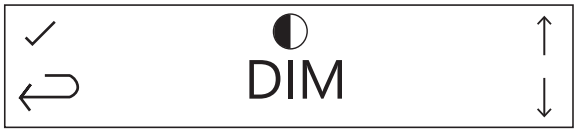

2. Press the up or down arrow to turn to select **HIGH**, **LOW**, **DIM,** or **OFF**. Press to save selection. Press .

- **Showroom Mode**

CAUTION

In showroom mode, the cooling function is inoperable. Only the display and the lighting will continue to operate.

1. Select from the settings menu.

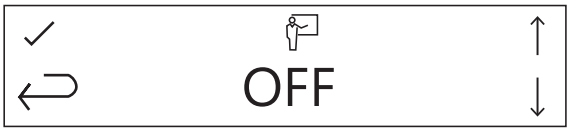

2. Press the up or down arrow to turn ON or OFF. Press the checkmark to save selection. Press ✓ to save selection. Press . The home screen will now display the showroom mode icon.

Showroom mode will maintain status after power cycle.

3. To disengage Showroom Mode, go to the settings screen and select the Showroom Mode icon. Press the down arrow. Press ✓ to save selection. Press .

Airflow and Product Loading

AIRFLOW

External

- Do not block the front grille - no additional clearance around sides, top or rear of unit is needed for ventilation
- Do not install behind a closed door

Internal

- When loading, leave space between internal fans, vents, and side walls to allow air to circulate freely

PRODUCT LOADING

Bottles and cans come in many shapes and sizes. Not all bottles and cans will fit on every shelf and wine rack. Larger diameter champagne and Magnum bottles only fit on wine racks when noted on the product specifications. When determining capacities U-Line uses typical 12 oz. cans, 12 oz. bottles, 750 mL white wine and red wine bottles shown below.

NOTICE

Restricting airflow may result in poor product performance, product failure, and uneven internal temperatures and may freeze contents.

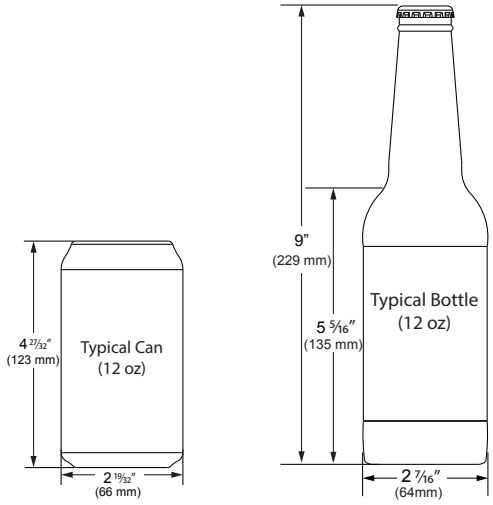

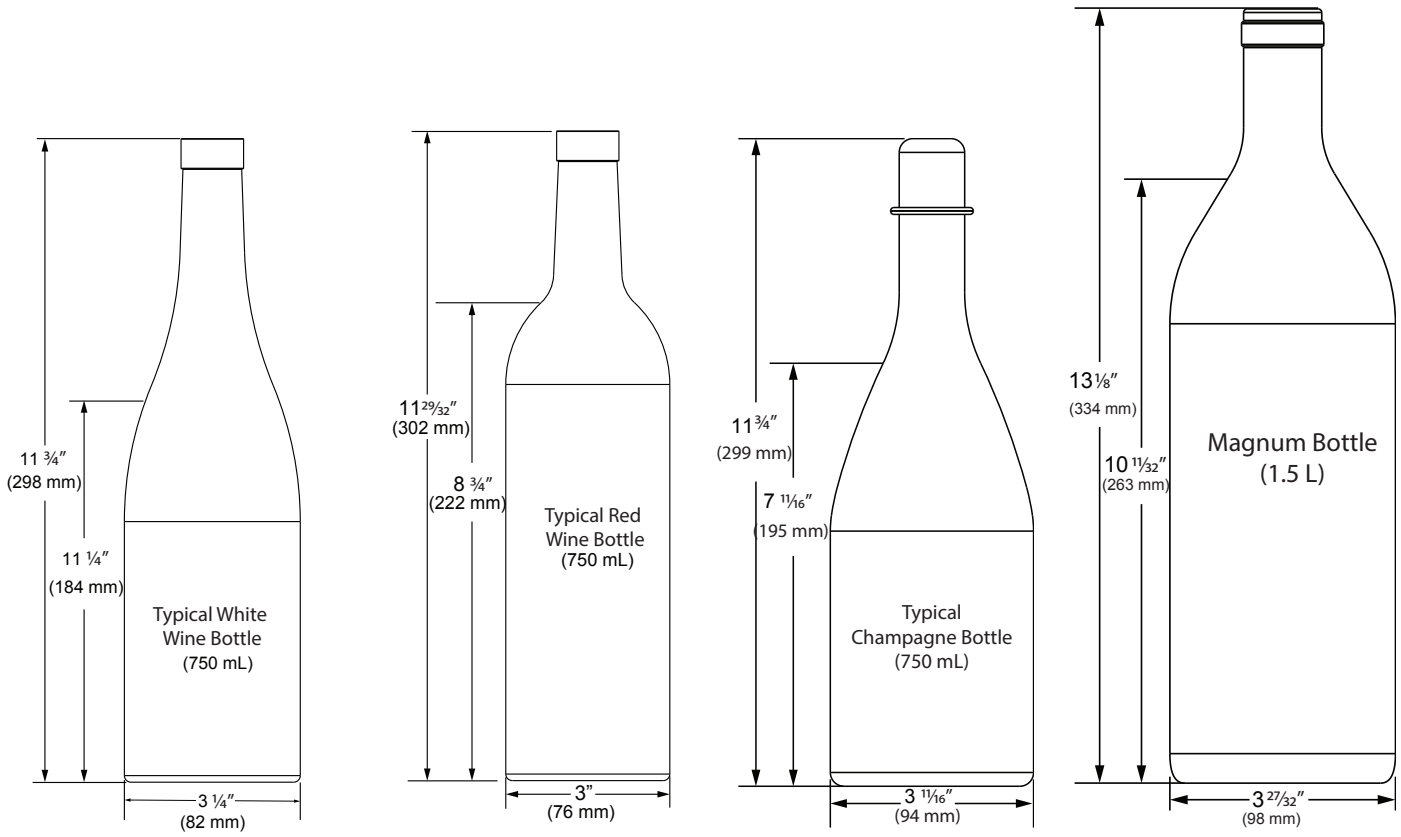

Recommended Wine Storage

CAUTION

To store magnum or oversized bottles, the shelf directly above must be removed. Failure to do so could result in bottle breakage (see Shelf Removal section for proper shelf removal.

Versatile Shelving System

The unit's shelving system makes it easy to store standard, magnum and half-sized bottles. There are a total of fifteen wine shelves which will each accommodate 10 standard bottles of wine, alternately displayed. Two convertible wine shelves adjust to allow bottles to be displayed.

Loading the Shelves

To load a shelf, pull the shelf forward and place the bottles on the shelf with the neck in the center of the shelf. Alternate the direction of the next bottle. Shelves may need to be removed to store some bottles.

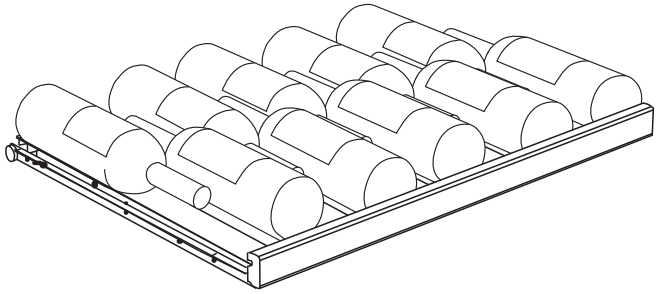

Wine Storage Guidelines

Wines that are stored for a long period of time should be stored at a stable temperature in a dark, vibration-free environment. Wines stored for a short term (six months) can be stored at 55ºF (13ºC) and above.

The ambient temperature of the room you locate your unit in could affect the temperature in your unit if the room temperature is lower than the unit's set temperature. The unit is designed cool, not heat the stored wines. Temperatures inside the unit cannot be higher than room temperatures outside of the unit. The unit is designed to perform at room temperatures of 70ºF (21ºC) and above.

Cleaning

Stainless Models

Stainless door panels and handles can discolor when exposed to chlorine gas, pool chemicals, saltwater or cleaners with bleach.

Keep your stainless unit looking new by cleaning with a good quality all-in-one stainless steel cleaner and polish monthly. For best results use Claire® Stainless Steel Polish and Cleaner. Comparable products are acceptable. Frequent cleaning will remove surface contamination that could lead to rust. Some installations may require cleaning weekly.

Do not clean with steel wool pads.

Do not use stainless steel cleaners or polishes on any glass surfaces.

Clean any glass surfaces with a non-chlorine glass cleaner.

Do not use cleaners not specifically intended for stainless steel on stainless steel surfaces (this includes glass, tile and counter cleaners).

If any surface discoloring or rusting appears, clean it quickly with Bon-Ami® or Barkeepers Friend Cleanser® and a nonabrasive cloth. Always clean with the grain. Always finish with Claire® Stainless Steel Polish and Cleaner or comparable product to prevent further problems.

Using abrasive pads such as Scotchbrite™ will cause the graining in the stainless steel to become blurred.

Rust not cleaned up promptly can penetrate the surface of the stainless steel and complete removal of the rust may not be possible.

Integrated Models

To clean integrated panels, use household cleaner per the cabinet manufacturer's recommendation.

INTERIOR CLEANING

Disconnect power to the unit.

Clean the interior and all removed components using a mild nonabrasive detergent and warm water solution applied with a soft sponge or non-abrasive cloth.

Rinse the interior using a soft sponge and clean water.

Do not use any solvent-based or abrasive cleaners. These types of cleaners may transfer taste to the interior products and damage or discolor the lining.

DEFROSTING

Under normal conditions this unit does not require manual defrosting. Minor frost on the rear wall or visible through the evaporator plate vents is normal and will melt during each off cycle.

If there is excessive build-up of 1/4" (6 mm) or more, manually defrost the unit.

Ensure the door is closing and sealing properly.

High ambient temperature and excessive humidity can also produce frost.

⚠ CAUTION

DO NOT use an ice pick or other sharp instrument to help speed up defrosting. These instruments can puncture the inner lining or damage the cooling unit. DO NOT use any type of heater to defrost. Using a heater to speed up defrosting can cause personal injury and damage to the inner lining.

NOTICE

The drain pan was not designed to capture the water created when manually defrosting. To prevent water from overflowing the drain pan and possibly damaging water sensitive flooring, the unit must be removed from cabinetry.

To defrost:

1. Disconnect power to the unit.
2. Remove all products from the interior.
3. Prop the door in an open position (2 in. [50 mm] minimum).
4. Allow the frost to melt naturally.
5. After the frost melts completely clean the interior and all removed components. (See INTERIOR CLEANING).
6. When the interior is dry, reconnect power and turn unit on.

Cleaning the Condenser

WARNING

Disconnect electric power to the unit before cleaning the condenser.

DO NOT use any type of cleaner on the condenser unit. Condenser may be cleaned using a vacuum, soft brush, or compressed air.

The condenser should be cleaned 2-3 times a year to remove any lint or dust.

Remove the grille

1. Disconnect power to the unit.

2. Remove 2 screws accessible through the opening in the grille.

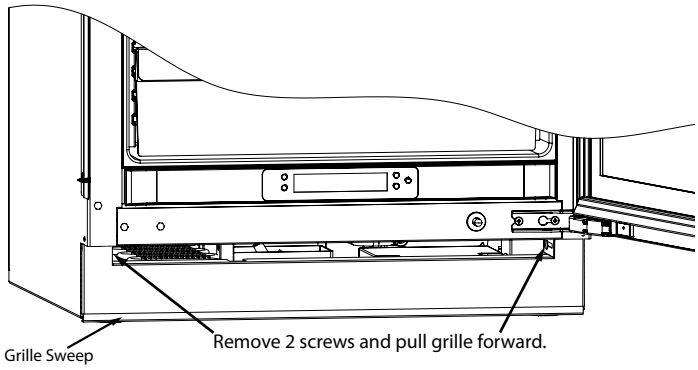

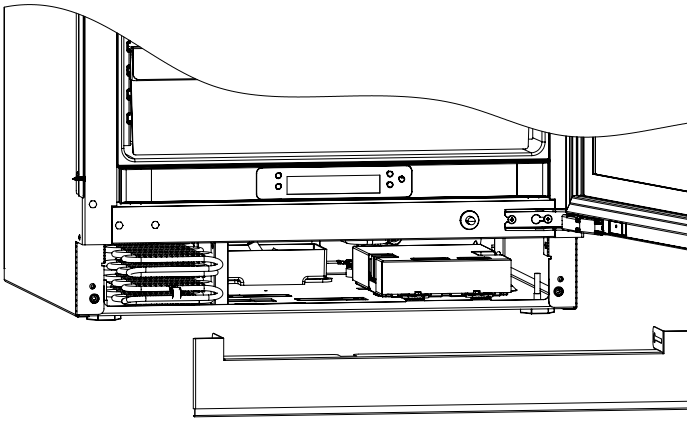

3. Remove grille and set asided. Hold on to the grille sweep as you remove the grille or it will fall loose.

Vacuum the condenser

4. Use a vacuum with a soft brush to remove all dust and lint on and around the condenser.

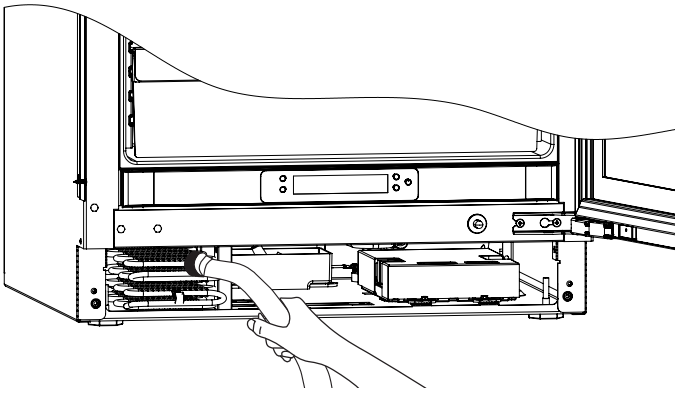

Install the grille

5. Align cabinet and grille holes and secure with 2 screws. Do not over tighten grille screws.

6. Connect power to the unit.

Extended Non-Use

VACATION/HOLIDAY, PROLONGED SHUTDOWN

The following steps are recommended for periods of extended non-use:

1. Remove all consumable content from the unit.
2. Disconnect the power cord from its outlet/socket and leave it disconnected until the unit is returned to service.
3. If ice is on the evaporator, allow ice to thaw naturally.
4. Clean and dry the interior of the unit. Ensure all water has been removed from the unit.
5. The door must remain open to prevent formation of mold and mildew. Open door a minimum of 2" (50 mm) to provide the necessary ventilation.

WINTERIZATION

If the unit will be exposed to temperatures of 40°F (5°C) or less, the steps above must be followed.

For questions regarding winterization, please call U-Line at 414.354.0300.

⚠ CAUTION

Damage caused by freezing temperatures is not covered by the warranty.

Troubleshooting

BEFORE CALLING FOR SERVICE

If you think your U-Line product is malfunctioning, read the CONTROL OPERATION section to clearly understand the function of the control.

If the problem persists, read the NORMAL OPERATING SOUNDS and TROUBLESHOOTING GUIDE sections below to help you quickly identify common problems and possible causes and remedies. Most often, this will resolve the problem without the need to call for service.

IF SERVICE IS REQUIRED

If you do not understand a troubleshooting remedy, or your product needs service, contact U-Line Corporation directly at +1.616.754.5601.

When you call, you will need your product Model and Serial Numbers. This information appears on the Model and Serial number plate located on the upper right or rear wall of the interior of your product.

NORMAL OPERATING SOUNDS

All models incorporate rigid foam insulated cabinets to provide high thermal efficiency and maximum sound reduction for its internal working components. Despite this technology, your model may make sounds that are unfamiliar.

Normal operating sounds may be more noticeable because of the unit's environment. Hard surfaces such as cabinets, wood, vinyl or tiled floors and paneled walls have a tendency to reflect normal appliance operating noises.

Listed below are common refrigeration components with a brief description of the normal operating sounds they make. NOTE: Your product may not contain all the components listed.

- Compressor: The compressor makes a hum or pulsing sound that may be heard when it operates.
- Evaporator: Refrigerant flowing through an evaporator may sound like boiling liquid.
- Condenser Fan: Air moving through a condenser may be heard.
- Automatic Defrost Drain Pan: Water may be heard dripping or running into the drain pan when the unit is in the defrost cycle.

TROUBLESHOOTING GUIDE

⚠ DANGER

ELECTROCUTION HAZARD. Never attempt to repair or perform maintenance on the unit before disconnecting the main electrical power.

Troubleshooting - What to check when problems occur:

Problem	Possible Cause and Remedy
Interior Light Does Not Illuminate	If the unit is cooling, it may be in Sabbath mode.
Light Remains on When Door Is Closed.	Turn off light switch if equipped. Adjust light actuator bracket on bottom of door.
Unit Develops Frost on Internal Surfaces.	Ensure the door is closing and sealing properly.
Unit Develops Condensation on External Surfaces.	The unit is exposed to excessive humidity. Moisture will dissipate as humidity levels decrease.
Product is Not Cold Enough	Air temperature does not indicate product temperature. See CHECKING PRODUCT TEMPERATURE below. Adjust the temperature to a cooler set point. Ensure unit is not located in excessive ambient temperatures or in direct sunlight. Ensure the door is closing and sealing properly. Ensure the interior light has not remained on too long. Ensure nothing is blocking the front grille, found at the bottom of the unit. Ensure the condenser coil is clean and free of any dirt or lint build-up.

CHECKING PRODUCT TEMPERATURE

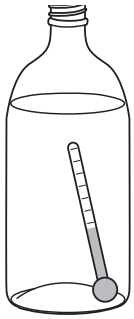

To check the actual product temperature in the unit:

1. Partially fill a plastic (nonbreakable) bottle with water.
2. Insert an accurate thermometer.
3. Tighten the bottle cap securely.
4. Place the bottle in the desired area for 24 hours.
5. Avoid opening the unit during the testing period.
6. After 24 hours, check the temperature of the water. If required, adjust the temperature control in a small increment (see CONTROL OPERATION).

Causes which affect the internal temperatures of the cabinet include:

- Temperature setting.
- Ambient temperature where installed.
- Installation in direct sunlight or near a heat source.
- The number of door openings and the time the door is open.
- The time the internal light is illuminated. (This mainly affects product on the top rack or shelf.)
- Obstruction of front grille or condenser.

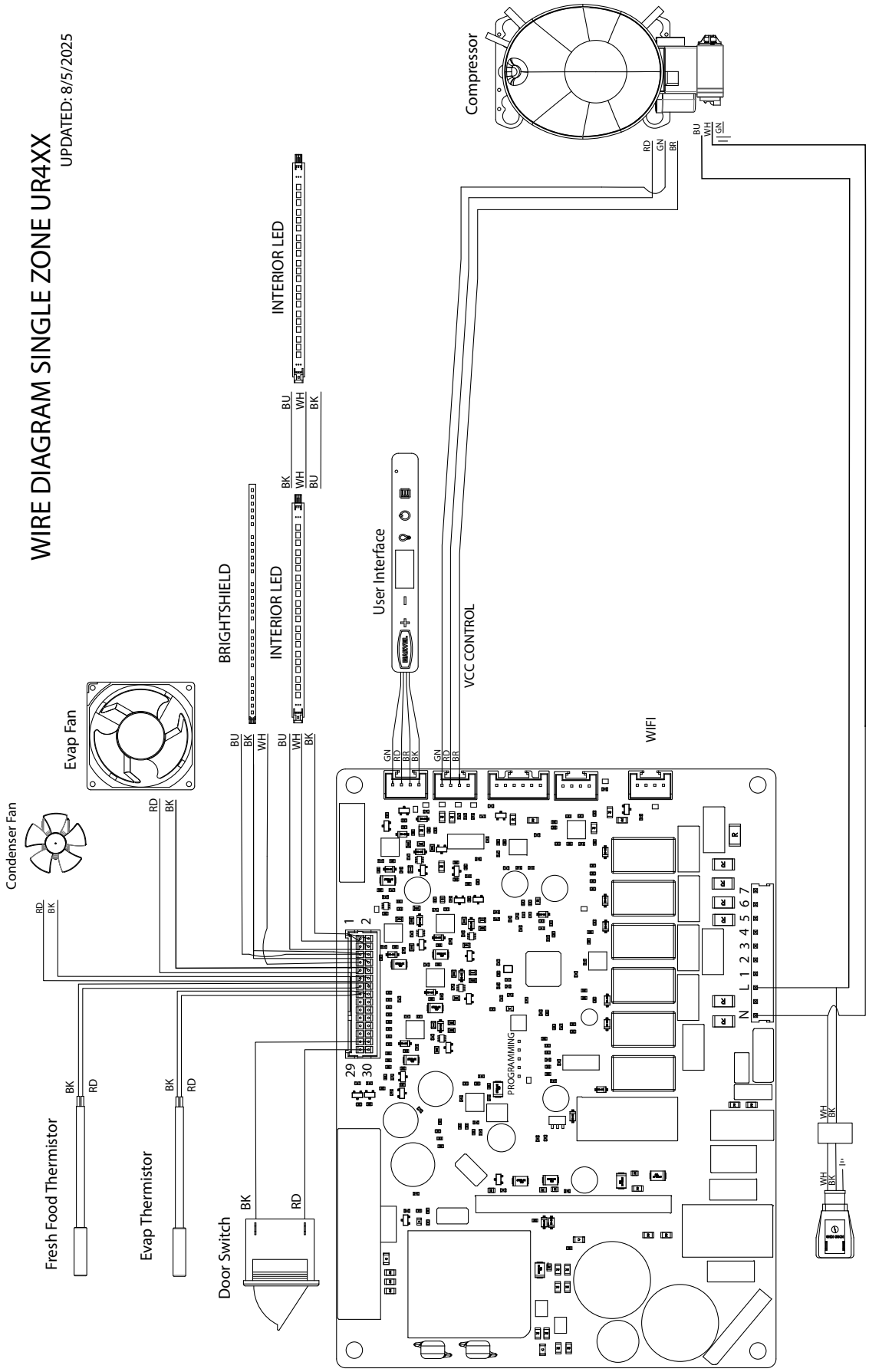
WIRE DIAGRAM SINGLE ZONE UR4XX
UPDATED: 8/5/2025
Compressor
INTERIOR LED
BRIGHTSHIELD
INTERIOR LED
User Interface
VCC CONTROL
WIFI
Evap Fan
Condenser Fan
Fresh Food Thermistor
Evap Thermistor
Door Switch
PROGRAMMING
RD
GN
BR
BU
WH
BK
N L 1 2 3 4 5 6 7
1
2
29
30

Product Liability

Field service technicians are authorized to make an initial assessment in the event of reported damages. If there are any questions about the process involved, the technician should call U-Line for further explanation.

While inspecting for defects or installation issues, photos should be taken to document any damages or issues found.

During the assessment, if the service technician is able to find the source of the damage and it can be resolved by replacement of a part, the servicer is authorized to replace the part in question. The part that caused the damage must be returned to U-Line in its entirety. The part must be clearly labeled with the serial number of the unit it was removed from, the date, and the servicer who removed the part.

If the service technician determines the damage is the result of installation issues (water connection/drain, etc.), the consumer would be notified and the issues shall be resolved at the direction of the consumer.

If damage is evident and the service technician is unable to find the source, U-Line must be contacted at +1.414.354.0300 for further direction.

8900 N. 55th Street • Milwaukee, WI 53223
T: +1.414.354.0300 • F: +1.414.354.5696
Website: www.u-line.com

Right product. Right place.
Right temperature Since 1962.

Parts

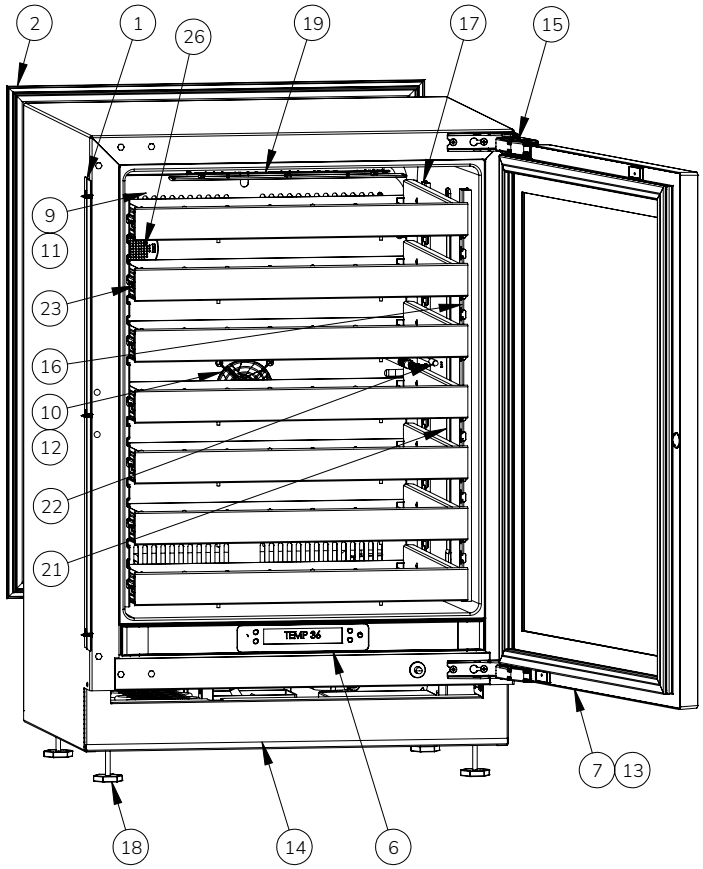

URWC424-IS01A		
Item	**Description**	**Part Number**
1	ANTI-TIP BRACKETS, BLACK	90-54215-00
2	BACK PANEL ASSY, 24"	90-54214-00
3	COMPRESSOR ASSY - FMSA4C (115V SERIAL)	90-54214-03
4	CONDENSER ASSY - 24"	90-54215-01
5	CONDENSER FAN ASSY, PX, STANDARD	90-54214-01
6	CONTROL ASSY - USER INTERFACE 24"	90-54214-21
7	DOOR ASSY, 24", INT., SOLID	90-54214-34
8	DRAIN PAN	90-54214-05
9	EVAP COVER 24"	90-54215-02
10	EVAP FAN COVER	90-54214-12
11	EVAPORATOR ASSEMBLY	90-54179-00
12	EVAPORATOR FAN	90-54214-13
13	GASKET, DOOR	90-54214-25
14	GRILLE ASY - ADJUSTABLE, 24" BLACK	90-54214-24
15	HINGE ASSY, DAMPENED, RT LFT	90-54214-22
16	LADDERS, FRONT	90-54218-00
17	LADDERS, REAR 24"	90-54219-00
18	LEG LEVELERS	90-54158-00
19	LIGHT ASSY LED, VYV	90-54214-16
20	MAIN BOARD	90-54214-02
21	RGB LED ASSY. PX, LONG	90-54215-09
22	SELCO THERMISTOR-BLACK	90-54214-14
23	WINE RACK, SLIDING, URWC3, BLACK	90-54214-18
24	WIRE HARNESS ASSY, STD *	90-54214-06
25	WOOD INTEGRATED KIT *	90-54214-26
26	CARBON FILTER ASSEMBLY-UL	90-54224-01

*NOT PICTURED

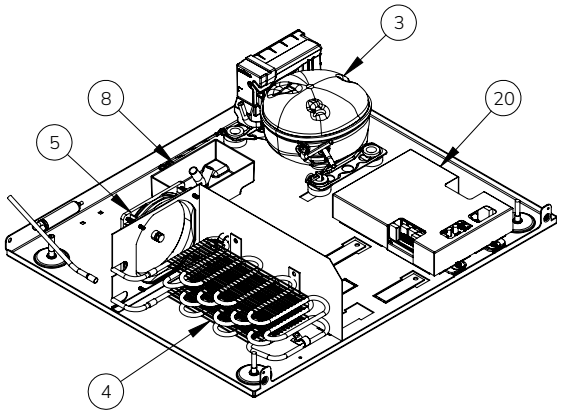

R-600A Specifications

For R-600a refrigerant service tips and more videos, go to: www.u-line.com/videos.

WARNING

Flammability warnings for a pure-iso-butane refrigerant.

Technician must observe all federal, state and local laws regarding refrigerants.

Gloves and Eye Protection must be used.

R-600a is considered non-toxic, but is flammable when mixed with air.

Keep a dry powder type fire extinguisher in the work area.

R-600a is heavier than air, do not allow any leakage/migration to low areas such as basements and stairs.

Never use a torch on a fully charged refrigeration system.

Never substitute U-Line OEM replacement parts or methods of construction.

R-600a must be stored and transported in approved containers.

⚠ WARNING

Only skilled and well trained service technicians permitted to service R-600a equipped products.

All tools and equipment must be approved for use with R-600a refrigerant.

Local, state and federal laws, standards must be observed along with proper certification and licensing.

Ventilation is required during servicing.

No conversions to R-600a from any other refrigerants. OEM R-600a equipped unit only.

Service area must be free of ignition sources.

No smoking is allowed in the service area.

All replacement electrical components must be OEM and installed properly (sealed and covered).

If the evaporator is cold prior to service, it must be thawed prior to service.

When using a vacuum pump, start pump before opening refrigeration system.

Vacuum pump and recovery equipment should be at least 10 feet from the work area.

It is recommended that a simple LPG gas detector is on site during service.

Ensure that all R-600a is removed from the system prior to brazing any part of the sealed system.

Only a clean, dry leak free system should be charged with R-600a.

R-600A SPECIFICATIONS/LABELING

R-600a equipped products are labeled (both the unit and the compressor).

R-600a is colorless and odorless.

R-600a is considered non-toxic, but is flammable when mixed with air.

Do not remove or alter any R-600a labeling on the product.

Use only a refrigerant grade R-600a from a properly labeled container.

RECOVERING/RECLAIMING R-600A

(R-600a has been exempted from recovery/reclaiming requirements by the US EPA)

Recovery/Reclaiming equipment must be approved for use with R-600a.

Ensure the evaporator is at room temperature prior to recovery/reclaiming R-600a.

Use a common piercing pliers or piercing valve to remove R-600a from the compressor process tube. (Note: Piercing devices must not be left on the system and must be replaced with a Schrader type valve.)

Evacuate/reclaim via the piecing pliers to ensure the system is empty of R-600a before any system work is performed.

The recovery cylinder must be evacuated (no air inside) prior to accepting R-600a.

The recovery cylinder must not be filled more than 45% safe fill level and refrigerants must not be mixed.

The recovery cylinder must be clearly marked with R-600a and Flammable Warning labels.

Ensure proper ventilation during recovery/reclaiming of R-600a.

Start vacuum pump/recovery pump prior to piercing the compressor process tube.

Follow recovery/reclaim OEM instructions for the specific equipment used.

SYSTEM REPAIR

Ensure no residual R-600a refrigerant is left within the system prior to repair (simple venting is not sufficient).

Evacuate and charge with dry nitrogen for leak checks.

Repair leaks or replace system parts as required.

When re-brazing, the system must be purged with dry nitrogen and at least one access point open to the atmosphere.

When re-brazing, proper ventilation is required along with constant monitoring for the presence of R600a refrigerant.

The filter dryer must be replaced any time the sealed system is serviced.

No system should be open to the atmosphere for longer than 15 minutes to avoid moisture migration into the system components.

LEAK DETECTION

After removal of the R-600a, the unit can be charged with dry nitrogen or helium.

Electronic leak detection or soap solution can be used to check for nitrogen/helium leaks.

Never use a halide torch or lighted match to check the system for leaks at any time.

The high side of the refrigeration system (compressor discharge to outlet of drier) must be leak tested with the compressor running.

The low side of the refrigeration system (evaporator, compressor and suction line) must be leak tested with the compressor off (equalized pressure).

RECHARGING

No air is ever to be allowed inside the refrigeration system (R-600a refrigerant or dry nitrogen only).

Never use a torch on a fully charged refrigeration system.

Install a Schrader Type access port on the compressor process stub.

Evacuate the system to 100 microns prior to charging.

Weigh in the R-600a charge using a refrigerant scale. (run compressor an extra two minutes to clear the charging hoses).

Seal the Schrader Type access port, a proper cap and seal must be used to close the system.

SUMMARY

Safely handling R-600a requires proper procedures and training.

R-600a approved service tools must be used.

R-600a labeling must not be removed or altered.

Proper ventilation during service is required.

Never apply a torch to a charged R-600a refrigeration system.

Use OEM replacement service parts and do not alter the construction of the unit.

System Diagnosis Guide

REGRIGERATION SYSTEM DIAGNOSIS GUIDE

System Condition	Suction Pressure	Suction Line	Compressor Discharge	Condenser	Capillary Tube	Evaporator	Wattage
Normal	Normal	Slightly below room temperature	Very hot	Very hot	Warm	Cold	Normal
Overcharge	Higher than normal	Very cold may frost heavily	Slightly warm to hot	Hot to warm	Cool	Cold	Higher than normal
Undercharge	Lower than normal	Warm-near room temperature	Hot	Warm	Warm	Extremely cold near inlet - Outlet below room temperature	Lower than normal
Partial Restriction	Somewhat lower than normal vacuum	Warm-near room temperature	Very hot	Top passes warm - Lower passes cool (near room temperature) due to liquid	Room temperature (cool) or colder	Extremely cold near inlet - Outlet below room temperature backing up	Lower than normal
Complete Restriction	In deep vacuum	Room temperature (cool)	Room temperature (cool)	Room temperature (cool)	Room temperature (cool)	No refrigeration	Lower than normal
No Gas	0 PSIG to 25″	Room temperature (cool)	Cool to hot	Room temperature (cool)	Room temperature (cool)	No refrigeration	Lower than normal

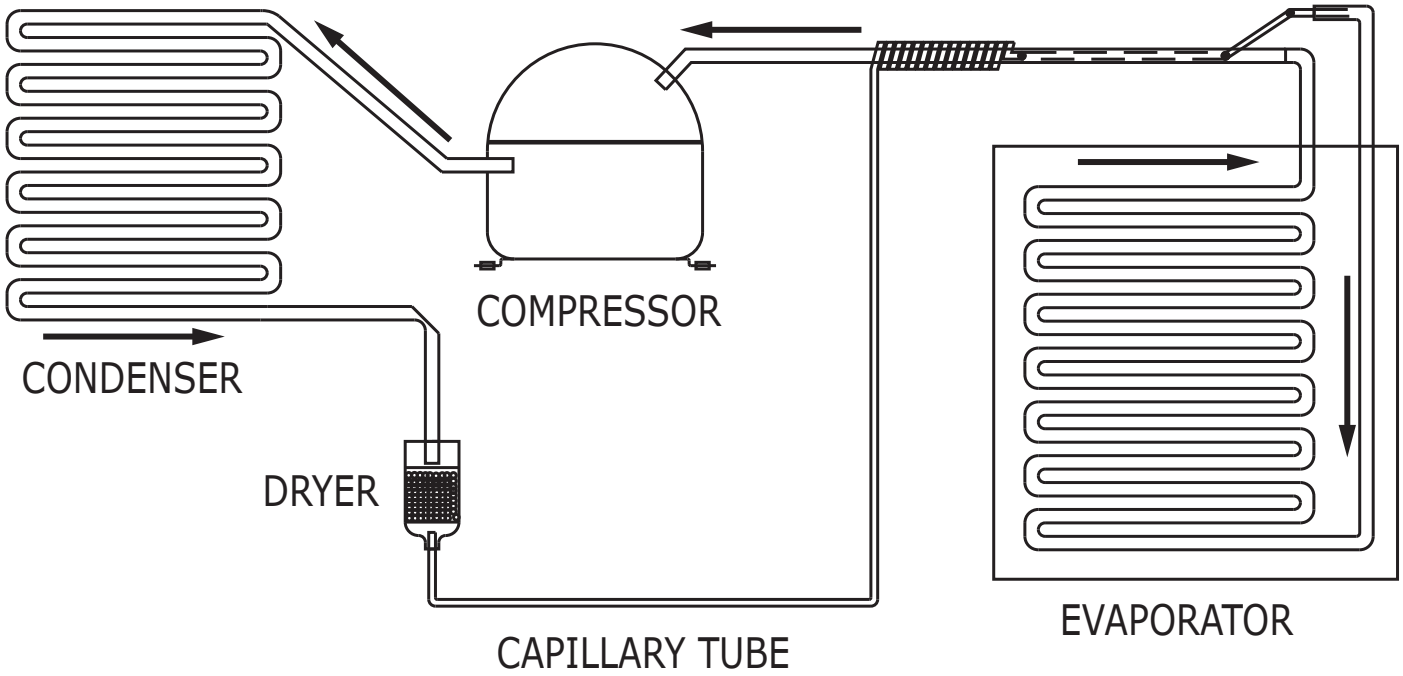

Compressor Specifications

DANGER

Electrocution can cause death or serious injury. Burns from hot or cold surfaces can cause serious injury. Take precautions when servicing this unit.

Disconnect the power source.

Do not stand in standing water when working around electrical appliances.

Make sure the surfaces you touch are not hot or frozen.

Do not touch a bare circuit board unless you are wearing an anti-static wrist strap that is grounded to an electrical ground or grounded water pipe.

Handle circuit boards carefully and avoid touching components.

	FMSA4C
REFRIGERANT	R600A
VOLTAGE	115 V - 127 VAC
FREQUENCY	60 HZ
START WINDING	16.4 +/- 8% Q at 25º C (77º F)
RUN WINDING	16.4 +/- 8% Q at 25º C (77º F)
LRA	2.17A
RLA	1.25A
STARTING DEVICE	INVERTER DRIVEN
All resistance readings are + 10%	

Troubleshooting - Extended

⚠ CAUTION

Never attempt to repair or perform maintenance on the unit until the main electrical power has been disconnected from the unit.

SPECIFIC ERRORS AND ISSUES

The advanced diagnostic capabilities of the electronic controls utilized on the 1, 3, and 5 Class units allow for easy and thorough troubleshooting.

Navigation of the control is the key and is explained in the CONTROL OPERATION section of the manual, along with control button layout, control function descriptions, a service mode menu and service menu selection explanations.

Verification of temperature and thermistor performance can be identified by directly viewing thermistor readings in the service mode.

Included in this section are some diagnostic tips and of course, if additional help is required, please contact the U-Line Corp, “Customer Care Facility” at +1.414.354.0300 for assistance.

NORMAL OPERATING SOUNDS

All models incorporate rigid foam insulated cabinets to provide high thermal efficiency and maximum sound reduction for its internal working components. Despite this technology, your model may make sounds that are unfamiliar.

Normal operating sounds may be more noticeable because of the unit’s environment. Hard surfaces such as cabinets, wood, vinyl or tiled floors and paneled walls have a tendency to reflect normal appliance operating noises.

Listed below are common refrigeration components with a brief description of the normal sounds they make. NOTE: Your product may not contain all the components listed.

- Compressor: The compressor makes a hum or pulsing sound that may be heard when it operates.
- Evaporator: Refrigerant flowing through an evaporator may sound like boiling liquid.
- Condenser Fan: Air moving through a condenser may be heard.
- Automatic Defrost Drain Pan: Water may be heard dripping or running into the drain pan when the unit is in the defrost cycle.

Solenoid Valves: An occasional clicking sound may be heard as solenoid valves are operated.

TROUBLESHOOTING GUIDE

Concern	Potential Causes	Action
Not Cooling	Compressor overheating	Verify proper air flow through condenser. Is condenser clean?
		Confirm condenser fan operation.
	Compressor not operating	Test overload and relay, replace as needed.
	Compressor operating - no cooling	Refer to System Diagnosis Guide.
Frozen Product	Control set too cold	Adjust Set Point Temp accordingly.
	Thermistor failure	Check Error Log in Service Mode, OHM thermistor.
Frost Buildup Inside Unit	Door Ajar or Restricted from Closing	Check door clearance to adjoining cabinetry. Check distribution of product in unit.
	Thermistor failure	OHM thermistor
Display Not Working	Display unplugged	Verify that both ends of the display wiring are firmly connected.
	Display wiring broken or damaged	Perform continuity test of wiring and replace as needed.
Interior Lights Not Working	Door switch misaligned or defective	Check the function of reed switch and door magnet adjustment.
Noisy	Refrigeration tubing touching cabinet	Carefully reposition tubing.
	Fan blade obstruction (wiring, foam insulation, packaging material)	Remove obstruction.

MAIN CONTROL

The main control board is very robust and is rarely the cause of system issues. It is important to fully diagnose the board for any suspected failures before attempting to remove the board for replacement or service. Follow the guidelines below to fully test and diagnose the main control.

Power Fault

If the unit does not (or seems to not) power on, follow the flow chart below to help diagnose the issue. Before beginning it is important to first verify the unit is not simply set to sabbath mode.

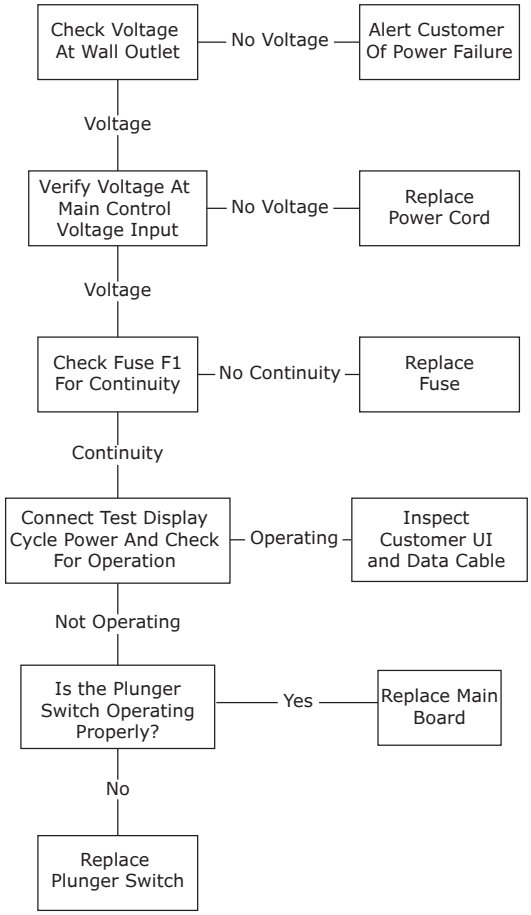

CAUTION

Precautions must be taken while working with live electrical equipment. Be sure to follow proper safety procedures while performing tests on live systems.

PLUNGER SWITCH

A plunger switch is used to monitor door state. When the door is closed it comes into contact with the plunger which closes a circuit which turns the light and display off. When the door is open the plunger moves outward and opens the circuit. If the door is left open for longer than 5 minutes the switch will trigger an error code and set an audible warning.

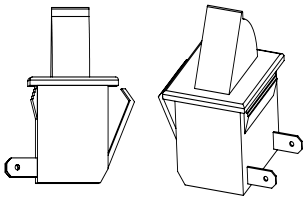

Thermistors

Thermistors are used for various temperature readings. Thermistors provide reliable temperature readings using a resistance which varies based on surrounding temperatures. If a faulty thermistor is suspected it may be tested using an accurate ohmmeter.

Both thermistors in the unit are identical. If a thermistor is suspected of being defective, the resistance can be verified. Place the thermistor in an ice water bath, the resistance should read 16.1k Ohms +/-5% on your meter.

Thermistor connections must be kept clean. A thermistor connection that has become corroded can cause resistance values from the thermistor to change as they pass through a dirty connection to the board.

It is for that reason that we apply dielectric grease to all of our thermistor connections. Dielectric grease will help to keep thermistor connections clean and dry.

If you change a thermistor in the unit please re-apply dielectric grease to the connection. If you encounter a dirty thermistor connection, you should replace the thermistor and the thermistor harness.

Thermistor error information can be found in the Control Operations - Service section.

This unit has **two** thermistors.

Thermistor one (Zone):

Located along the right hand side wall. It is used to maintain the operating temperature within that zone.

Thermistor two (Evaporator):

Located on the evaporator. It is used for defrost.

THERMISTOR FAILURE

Zone Thermistor

If the zone thermistor in the unit fails, the unit will continue to cool in a backup mode (Self Preservation Mode) to preserve the integrity of the contents. The unit will otherwise operate normally.

Evaporator Thermistor

If the evaporator thermistor fails, the unit will rely on a preset defrost timer during defrost cycles. The unit will otherwise operate normally. Refer to defrost section.

Thermistor Resistance Data

Temp (F)	Temp (C)	Nominal Resistance (OHMS)*
-40	-40	169157
-31	-35	121795
-22	-30	88766
-13	-25	65333
-4	-20	48614
5	-15	36503
14	-10	27681
23	-5	21166
32	0	16330
41	5	12696
50	10	9951
59	15	7855
68	20	6246
77	25	5000
86	30	4029
95	35	3266
104	40	2665
113	45	2186
122	50	1803
131	55	1495
140	60	1247
149	65	1044
158	70	879
167	75	743
176	80	631

* (+/- 5%)

Defrost

This unit defrosts, by default, every 12 hours of compressor runtime for 45 minutes. If you have verified that the unit does not have an ambient air leak, refer to the Control Operation - Service section and adjust unit to defrost every 9 hours for 60 minutes. Also, adjust the #2 thermistor to -4 instead of 0.

CLEANING AND MAINTENANCE

- **Clean the Condenser Every Six Months**

⚠ CAUTION

Failure to keep the condenser clean can result in permanent damage to the compressor.

The condenser coil is located near the compressor and usually at the bottom of the machine. In order for the condenser to perform efficiently, it must be cleaned about every six months to remove dust and debris and prevent overheating.

- **Deep Clean the Ice Machine Every Six Months**

⚠ CAUTION

Neglecting this cleaning will lead to mold or mildew buildup, cloudy ice, reduced water flow, reduced ice production, and damage to the machine.

⚠ CAUTION

Use only manufacturer-approved, nickel-safe ice machine cleaner and follow all label warnings and directions. Order ice machine cleaner online: www.u-line.com.

Every six months the ice machine requires a thorough cleaning to remove debris from the bin and flush out impurities that accumulates from the water supply; clear, craft, and nugget machines are equipped with a built-in cleaning cycle.

⚠ CAUTION

- **Clean Stainless Steel Surfaces**

Your machine is built with quality stainless steel, but it can still rust when not properly maintained.
- Avoid exposure to outdoor elements such as rain, snow, sprinklers or pool splash.
- Use only a non-chlorine, non-abrasive stainless steel cleaner.
- Inspect the machine for any signs of rust. When spotted early, the rust is only on the surface and can usually be scrubbed off.

SAFE INSTALLATION AND MAINTENANCE

- **Outdoor Operation**

⚠ CAUTION

Only machines designed for outdoor use may be operated outdoors.
- The machine should be installed under cover, to avoid exposure to rain, snow, and direct sun.
- The machine should not be not be exposed to chlorinated water such as from pool or hot tub splash.
- Do not operate in temperatures below 45°F (7°C) or above 100°F (38°C).

- **Indoor Operation**

- Install where the machine will not be exposed to direct sunlight - especially if the appliance a glass door.
- Do not install the machine where it will be exposed to chlorinated water such as from an indoor pool or hot tub splash.
- Do not operate in temperatures below 50°F (10°C) or above 100°F (38°C).

- **Location and Ventilation**

- Do not block the grille on the front base of the machine; proper airflow is essential to cooling.
- Do not operate the appliance inside a cabinet; it has been designed to operate under a counter or free-standing (certain models only).

- **Proper Sealing - Beverage Dispensers**

- If not sealed properly, excessive condensation, limited cooling, and damage to the machine will occur. When correctly installed, the insulation should extend from within the refrigerator, through the counter, and into the tap tower.

ELECTRICAL AND DRAINAGE REQUIREMENTS

- **Operate With a Safe Electrical Connection**

⚠ CAUTION

Only operate the appliance on a dedicated circuit to avoid power fluctuations and overloads.
- Do not use an extension cord. Only the supplied power cord directly connected to an outlet ensures that the machine will safely receive adequate power. Extension cords can become unplugged accidentally, overheat, or become damaged. Improper electrical connection will void the warranty.

- **Operate With Proper Drainage**

If your appliance requires a drain hookup consult a plumber for proper installation. Improper drainage can cause damage to the machine as well as its surroundings. Improper drainage will void the warranty.

U-LINE

U-Line Limited Warranty

TWO YEAR LIMITED PARTS & LABOR WARRANTY – Home and Seamless Collections

For two years from the date of original purchase, this warranty covers all parts and labor to repair or replace any part of the product that proves to be defective in materials or workmanship. For products installed and used for normal residential use, material cosmetic defects are included in this warranty, with coverage limited to 60 days from the date of original purchase. All service provided by U-Line under the above warranty must be performed by a U-Line factory authorized servicer, unless otherwise specified by U-Line. Service provided during normal business hours.

LIMITED SIX YEAR SEALED SYSTEM PARTS WARRANTY – Home and Seamless Collections

For six years from the date of original purchase, U-Line will cover the following parts only(no labor) if they prove to be defective under normal residential use: compressor, condenser, evaporator, drier, and connecting tubing.

WARRANTY TERMS

These warranties apply only to products installed in any one of the fifty states of the United States, the District of Columbia, or the ten provinces of Canada. The warranties do not cover any parts or labor to correct any defect caused by negligence, accident or improper use, maintenance, installation, service, repair, acts of God, fire, flood or other natural disasters. The product must be installed, operated, and maintained in accordance with U-Line Brand User Guides.

The remedies described above for each warranty are the only ones that U-Line will provide, either under these warranties or under any warranty arising by operation of law. U-Line will not be responsible for any consequential or incidental damages arising from the breach of these warranties or any other warranty, whether express, implied, or statutory. Some states do not allow the exclusion or limitation of incidental or consequential damages, so the above limitation or exclusion may not apply to you. These warranties give you specific legal rights, and you may also have other rights which vary from state to state.

Any warranty that may be implied in connection with your purchase or use of the product, including any warranty of merchantability or any warranty fit for a particular purpose is limited to the duration of these warranties. Some states do not allow limitations on how long an implied warranty lasts, so the above limitations may not apply to you.

The warranties only apply to the original purchaser and are non-transferable.

The warranties apply to units operated outside only if designed for outdoor use by model and serial number.

Replacement water filters, light bulbs, and other consumable parts are not covered by these warranties.

The start of U-Line's obligation is limited to four years after the shipment date from U-Line.

In-home instruction on how to use your product is not covered by these warranties.

Food, beverage, and medicine loss are not covered by these warranties.

If the product is located in an area where U-Line factory authorized service is not available, you may be responsible for a trip charge or you may be required to bring the product to a U-Line factory authorized service location at your own cost and expense.

Units purchased after use as floor displays, and/or certified reconditioned units, are covered by the limited one year warranty only and no coverage is provided for cosmetic defects.

Signal issues related to Wi-Fi connectivity are not covered by these warranties.

Equipment that is not installed, operated and maintained in accordance with U-Line's Use and Care Manual or other written materials provided to you by U-Line or available for the Equipment (as may be updated by U-Line from time to time, the "Manual"), a copy of which is provided to you with the Equipment or otherwise will be furnished to you upon request, is excluded from this warranty. This warranty does not apply to damage or failure which results, in U-Line's or its service agent's sole opinion, from failure to provide a suitable installation and operating environment (including power and HVAC if applicable) and facilities as prescribed by the Manual, misuse, abuse, accident or improper use, neglect, power failure or power surges (over or under voltage), or to damage or failure from flood, fire, lightning or other natural or man-made disasters, or other Acts of God, or to Equipment that has missing or altered serial numbers.

Modifications and Repair: Equipment that has been modified or altered by persons other than U-Line's or its service agents, or Equipment that has had non-approved devices or connection items attached thereto, is excluded from coverage under this warranty. Repair of the Equipment by anyone other than U-Line's or its authorized service agents will void all warranties on the Equipment.

Accessories: Accessories and parts (collectively "Accessories") that are consumed in the normal course of Equipment operation or maintenance are excluded from this warranty. Failure of or damage to Equipment or components from the use of non-approved cleaning chemicals, devices or processes is also excluded from this warranty.

Warranty Service, Exclusive Remedy

U-Line will be solely responsible for determining whether or not the Equipment or any component thereof is defective. Defective components covered by this warranty will be repaired or replaced at U-Line's option without charge to you and such repaired or replacement components will be covered by this warranty for the balance of the Warranty Period. Parts used in the repair of defective components and replacement components may be new, recovered or rebuilt. At its sole option, U-Line may decide to replace defective Equipment covered by this warranty with new, recovered or rebuilt Equipment of equal or greater capability, and such Equipment will be covered by this Limited Warranty for the balance of the Warranty Period. Defective Equipment and components will become the property of U-Line. This paragraph states U-Line's sole and exclusive obligation and liability and your sole and exclusive remedy under this warranty. U-Line shall not be responsible for a failure to provide warranty services due to causes beyond U-Line's or its service agents' control.

Warranty Claims

Claims under this warranty must be reported to U-Line under such reporting service as U-Line may designate. Upon receipt of the claim and related information and preliminary verification that the claim is valid, U-Line will promptly notify an authorized service agent to contact you and arrange for an on-site repair visit during the service agent's normal working hours. Any costs incurred by U-Line or its service agent associated with a service agent being refused or unable to gain access to the Equipment on your premises, or a claim not covered by this warranty, will be charged to you.

Disclaimer of Damages

U-Line disclaims all incidental, special and consequential damages, including but not limited to loss of use, lost revenue or profits, or substitute use, suffered by you or any third party, whether arising in contract, tort (including negligence), or otherwise, resulting from any breach by U-Line or its service agents of this warranty, or resulting from the manufacture, use, or defects, of or in the Equipment, even if U-Line was apprised of the possibility of such damages.

Customer Indemnity

You agree to indemnify, defend and hold U-Line harmless from all third-party claims, demands, judgments, fees and costs directly or indirectly arising out of or related to your use of the Equipment. You further agree to indemnify and hold U-Line harmless from any incidental, consequential or special damage suffered by you, including lost revenue or profits, loss of

use, or substitute use, during periods of Equipment failure or loss of use.

Governing Law, Entire Warranty

This warranty shall be governed and construed in accordance with the laws of the State of Michigan, USA (except with respect to its provisions regarding conflicts of laws). The warranty described herein is the complete and only warranty for Equipment and supersedes all prior oral or written agreements and understandings that may have existed between us relating to Equipment warranties. The terms of this warranty may not be altered, amended or modified except by a signed writing from U-Line. Any purported alteration, amendment or modification by a service agent or anyone else will not be enforceable against U-Line.

Charges for Non-Warranty Service or Rejection of Service Visit

In the event that repairs, replacement or service are provided by U-Line's service agents for work not covered by this limited warranty, customers agree to pay the service agent directly according to the service agent's normal scale of charges. In the event U-Line is invoiced by the service agent for services not covered under this extended warranty, U-Line will invoice customer, and customer will pay such invoice based on terms of net 10 days. Customer also agrees to pay any cost incurred by U-Line or its service agent associated with a service agent responding to a call for service but then being refused or unable to gain access to the Equipment on Customer's premises. Failure to submit payment may, at U-Line's discretion, result in U-Line voiding the balance of the warranty. In no event will U-Line authorize a customer with an outstanding Non-Warranty invoice.

For parts and service assistance, or to find factory authorized service near you, contact U-Line at 616.754.5601.