FISHER & PAYKEL

INTEGRATED REFRIGERATION

INTEGRATED

RS2435V2RT1, RS2435V2R1, RS2435SBLT1, RS2435SBL1

INSTALLATION GUIDE

TOOLS REQUIRED

Supplied

- [ ] Spanner
- [ ] L key combi PH T25
- [ ] M4 ball allen key

Not supplied

- [ ] Powered driver
- [ ] Flathead screwdriver
- [ ] Measuring tape
- [ ] Phillips screwdriver
- [ ] Cutter
- [ ] Hacksaw
- [ ] Hand truck
- [ ] Socket 8mm
- [ ] Nut driver

PARTS REQUIRED

INSTALL KIT

Install Kit A (bracket anti-tip assembly)

- [ ] Anti-tip bracket
- [ ] 5x Plug masonry SP630#10X30MM
- [ ] 5x Screw WS #10X35 T17 WFR PH ZP

Install Kit B (hinge spacer & depth gauges)

- [ ] Assy hinge spacer A
- [ ] Cover hinge spacer A
- [ ] Assy hinge spacer B
- [ ] Cover hinge spacer B
- [ ] 2x Depth gauge non hinge
- [ ] 4x Screw hinge spacer

Install Kit C (kit door screw UC)

- [ ] 4x Screw M5x12 PH MT STL ZN

Install Kit D (kit flow divider)

- [ ] Door seal flow divider
- [ ] Ball hex key M4
- [ ] 2x Screw SD #7X13 PAN PH ZP
- [ ] Spanner door
- [ ] Cap divider flow door
- [ ] L key combi PH2 T25

Install kit E (kit screw alcove attachment)

- [ ] 6x Twinthread screw 8GX19

Install kit F (kit panel attach)

- [ ] 4x Slider bracket skin DR 60cm
- [ ] 4x Bracket trim side door 60cm
- [ ] 4x Spacer bracket side DR 60cm

Install kit G (kit screw panel attachment)

- [ ] 21x Screw ST 8X5/8 CSK PH AB ZP

Install kit H (UI trim kit)

- [ ] Trim UI RS60 non Hinge RH
- [ ] Trim UI RS60 Hinge RH
- [ ] Trim UI RS60 non hingeLH
- [ ] 2x Bolt limiting hinge K08
- [ ] Trim UI RS60 Hinge LH

Miscellaneous

- [ ] Blocker air bypass kickstrip

PARTS REQUIRED

TRIM KIT

- [ ] MTG Plate toe kick RS60
- [ ] Trim Side DR 60cm
- [ ] Trim Side Hinge DR 60cm
- [ ] Template Panel Door 60cm UC
- [ ] Glass door trim

JOINER KIT

To be ordered seperately for multiple installation.

Joiner kit A (bracket joiner plinth)

- [ ] 9x Screw M5X12 PH MT STL ZN
- [ ] Bracket dual plinth FNT (2X)

Joiner kit B (bracket joiner top)

- [ ] Bracket dual connection top
- [ ] 4x Screw M5X12 CSKPH NP

Joiner kit C (bracket joiner rear)

- [ ] 4x Screw 8GX16 mush washer HD
- [ ] Bracket dual plinth FNT (X1)

Miscellaneous

- [ ] Trim centre dual install 60cm UC

MISCELLANEOUS ITEMS (MI) PACK

- [ ] Safety booklet
- [ ] Service and Warranty
- [ ] Registration card

ACCESSING YOUR PRODUCT SPECIFICATIONS

For full product, cabinetry and service specifications, refer to the Planning Guide. To access the Planning Guide, scan the QR code or visit fisherpaykel.com/specify. Search by appliance type, product name or model code.

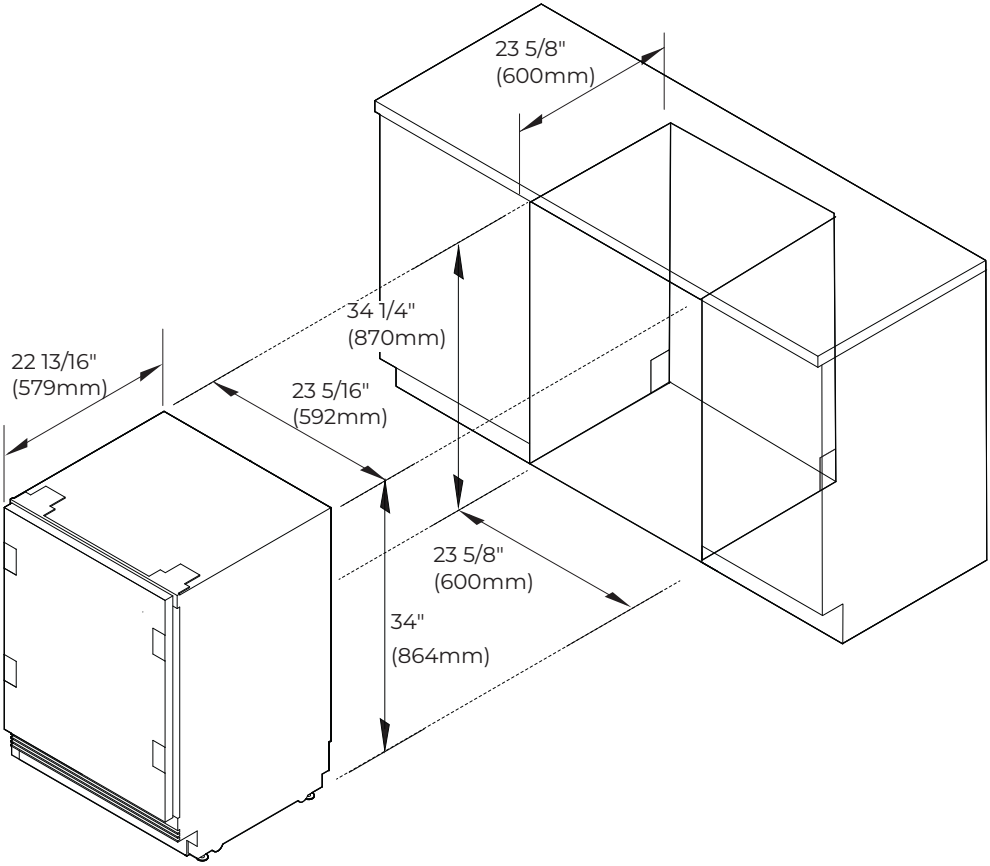

PRIOR TO INSTALLATION

fisherpaykel.com/specify

1. Measure alcove. Ensure all minimum specifications have been met. Refer to the planning guide for details.

3. Ensure alcove is square, secure and that a finished return has been created.

2. Ensure services are accessible and correctly installed.

Refer to the planning guide for specifications.

PRIOR TO INSTALLATION

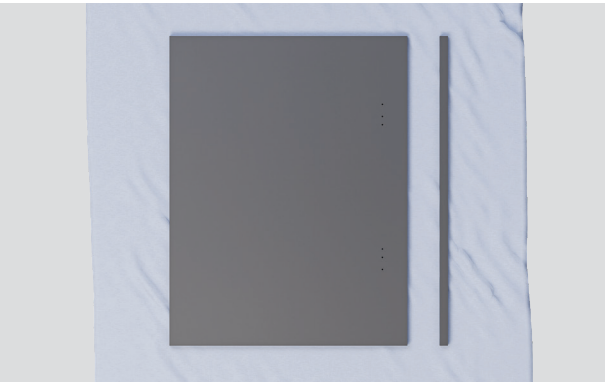

4. Ensure all panels are set up to the correct specifications.

Refer to the planning guide for details.

5. Ensure all bracket and handle holes have been pre-drilled.

Refer to the planning guides for details.

UNPACKING

1. Cut the straps, open the top and cut down the side of the carton to remove.

Remove all pre-packaged parts.

2. Dispose of packaging responsibly.

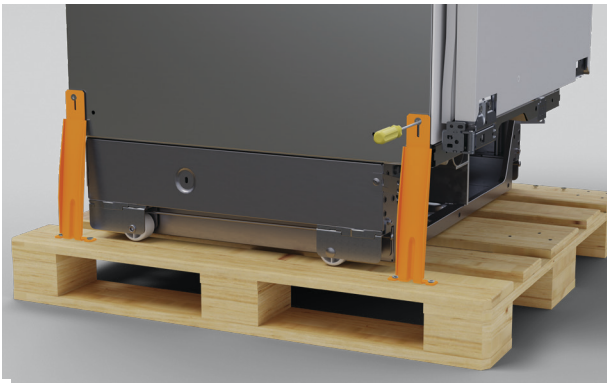

3. Using a Phillips screwdriver, remove the transit bolts from one side of the product and set aside.

4. Check levelling feet have been raised before restraining to a handtruck.

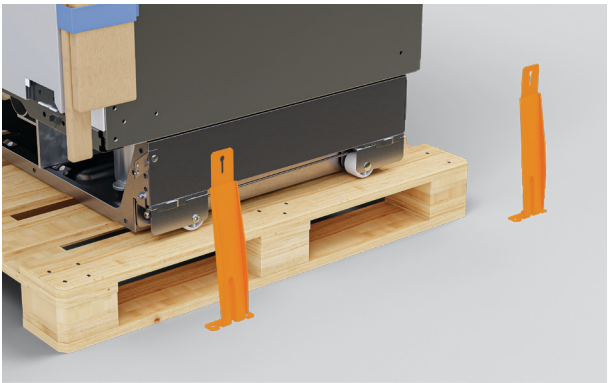

5. Remove the two remaining transit brackets.

6. Tilt product onto handtruck and remove pallet. Move product to the installation location.

Remove and discard corner posts.

INSTALL ANTI-TIP BRACKET

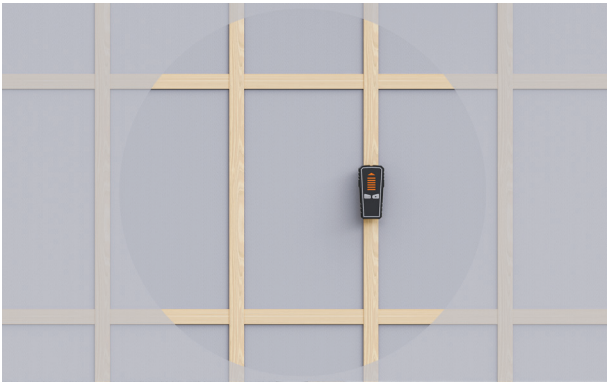

1. Ensure wall stud or solid surface is present.

2. If alcove depth is greater than 23 5/8" (600mm)

A spacer will be required to be installed alongside the anti-tip bracket to bring depth to 23 5/8" (600mm).

3. Measure the height from the floor to the front overhang and mark on the rear wall.

INSTALL ANTI-TIP BRACKET

4. Solid wall installations

Using the bracket as a guide, pre-drill four holes into the wall or spacer. Secure using four Phillips screws.

Install kit A

5. Masonry wall installations

Using the bracket as a guide, pre-drill four holes into the wall. Hammer four masonry plugs into the wall until flush before securing using four Phillips screws.

Install kit A

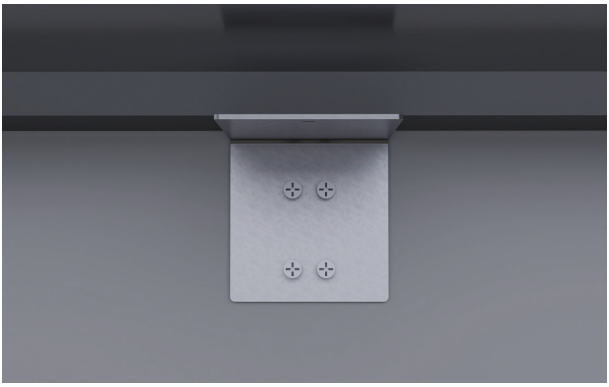

6. Ensure the anti-tip bracket is installed correctly to prevent the product tipping forward when the door is opened.

REMOVE GRILLE

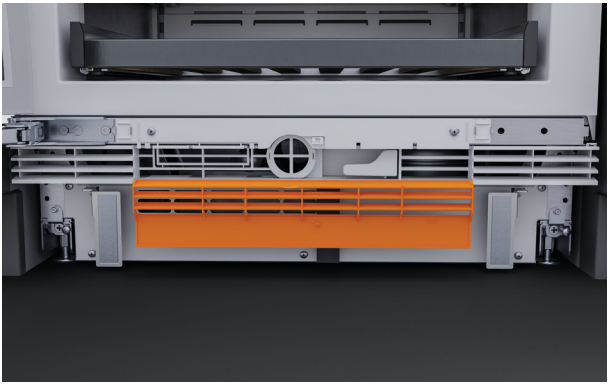

1. Push the grille flap to open.

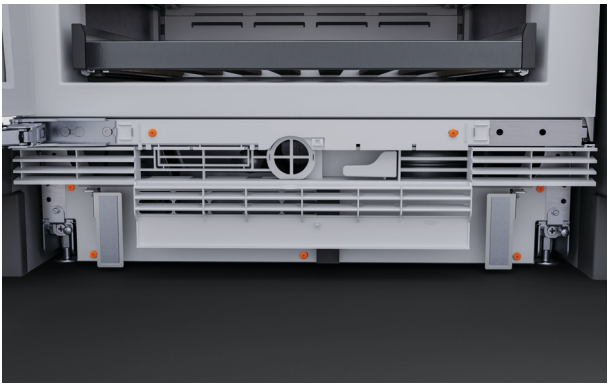

2. Unscrew the two Phillips screws from behind the flap and the five screws from the grille front. Set aside.

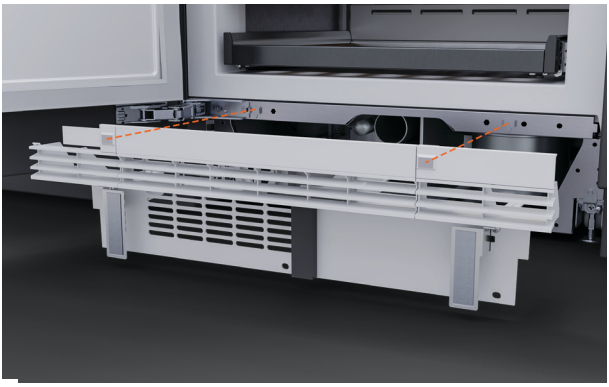

3. Pull the grille outwards from the product to remove.

HINGE SWAP (OPTIONAL)

1. Open the door.

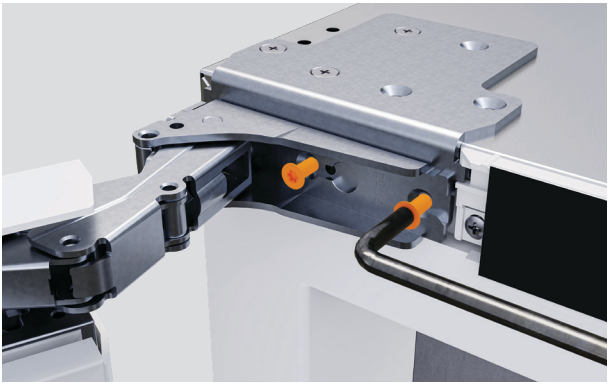

2. Loosen the hinge screws using the supplied Torx T25 driver. Slide door off and place on a protected surface.

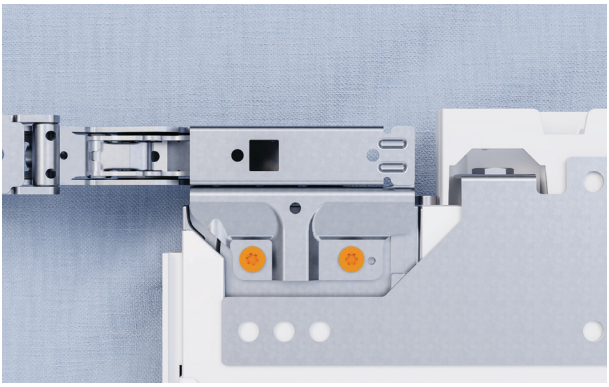

3. Carefully remove hinges from door and set aside.

HINGE SWAP (OPTIONAL)

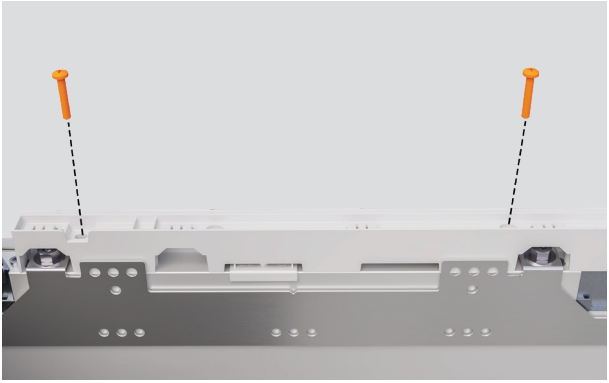

4. Remove top cover and set aside.

5. Push on the edge of the outside plates. Lift out and swap to other side.

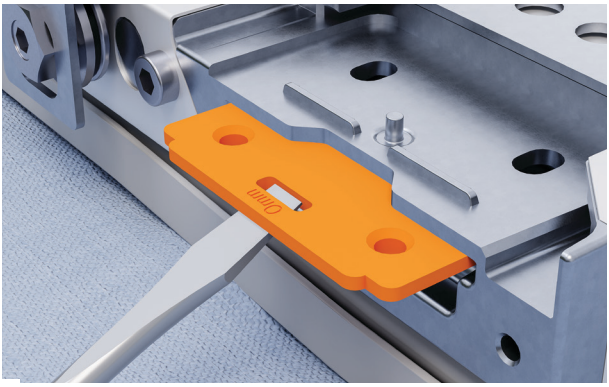

6. Use a flathead screwdriver to remove the inside plates. Move to the other side ensuring the rounded corners face the inside.

HINGE SWAP (OPTIONAL)

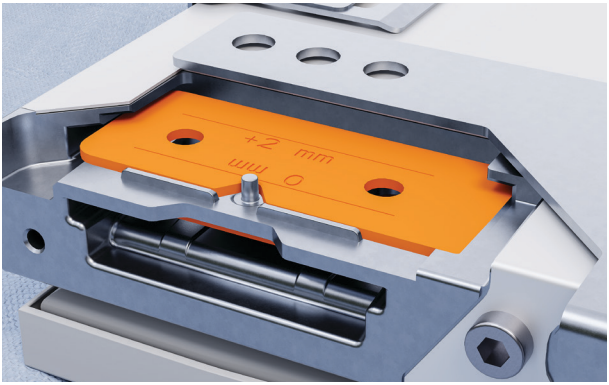

7. Check plates are positioned correctly.

8. Swap hinges as illustrated. Ensure base of hinge is parallel and tightened securely.

Refit top cover.

9. Swap alcove bracket with the hinge bracket. Secure each using three screws.

HINGE SWAP (OPTIONAL)

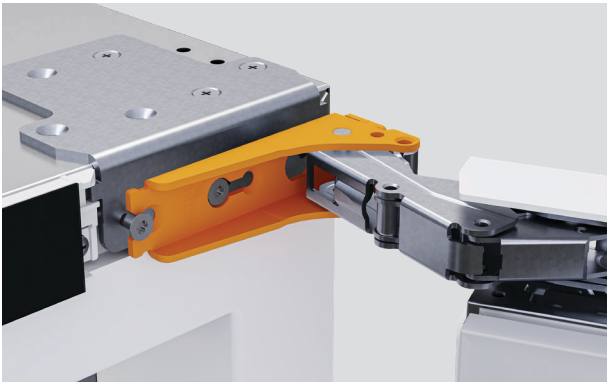

10. Slot the door back onto the screws and tighten using the supplied Torx key.

JOIN PRODUCTS (MULTIPLE INSTALLS ONLY)

1. Ensure doors are closed before rolling products into position.

2. Secure the lower front bracket using four screws.

Joiner kit A

3. Secure the upper front bracket using four screws.

Joiner kit B

JOIN PRODUCTS (MULTIPLE INSTALLS ONLY)

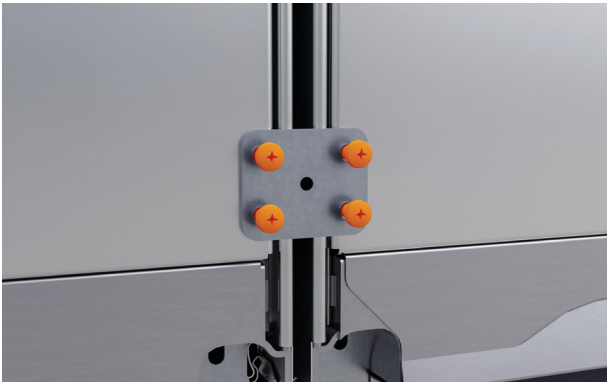

4. Secure the lower rear bracket using four screws

Joiner kit A

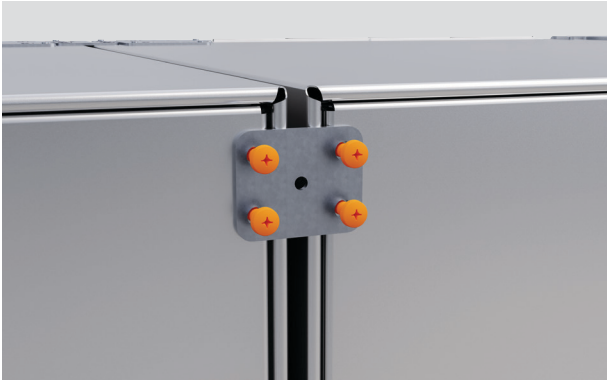

5. Secure the upper rear bracket using four screws.

Joiner kit C

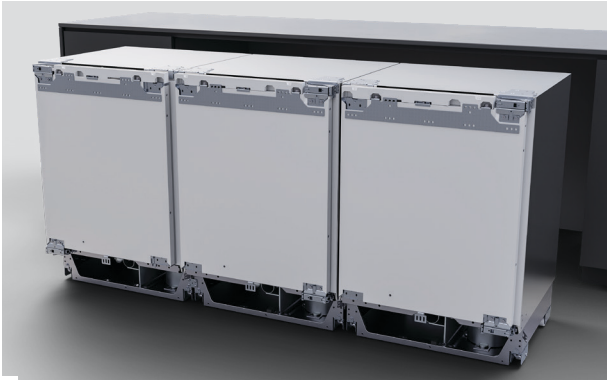

6. Repeat for additional products.

INSTALL DEPTH GAUGES AND SPACERS

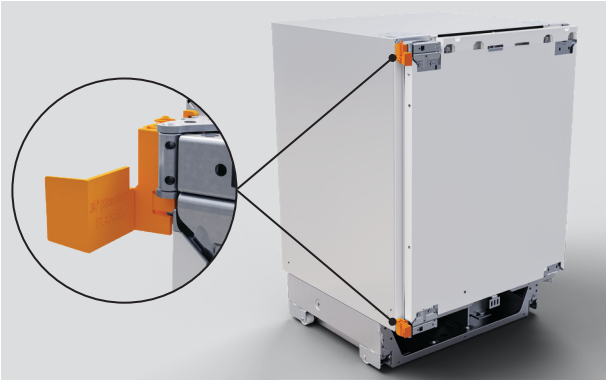

1. Clip both hinge spacers onto the product.

For right-hand hinge installations, ensure spacer A is fitted to the top hinge and spacer B is fitted to the bottom hinge, and vice-versa for left-hand hinge installations.

Install kit B

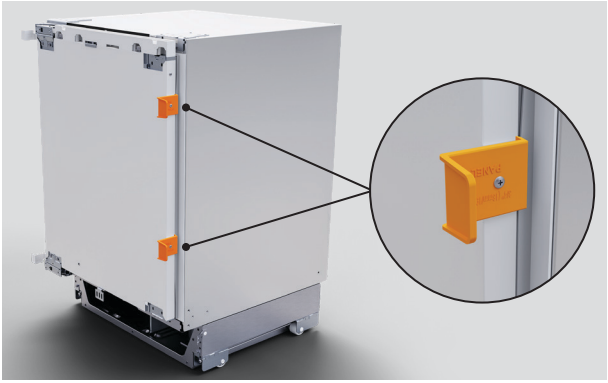

2. Fit the depth gauges to the door using the supplied Phillips screws.

Install kits B & C

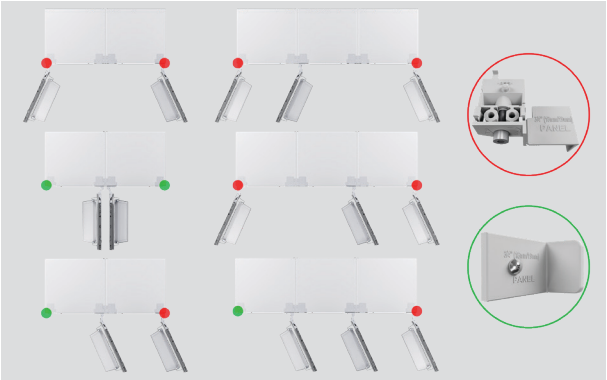

3. Fit either the depth gauges or spacers at the top and bottom of your product set based on your installation configuration.

INSERT HINGE LIMITING PIN (OPTIONAL)

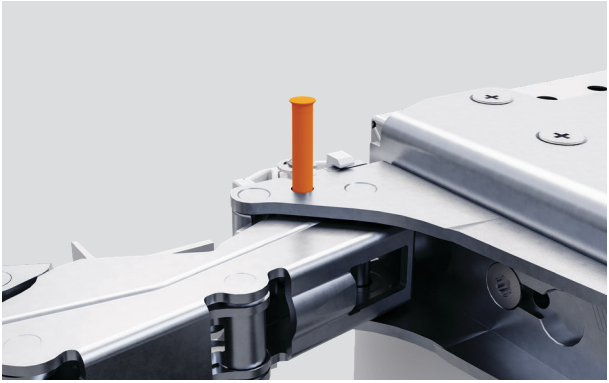

4. To limit the door opening to 90°, lower the hinge limiting pin into the upper and lower hinges.

Install kit H

CONNECT POWER

1. If required, wrap a thread around the power cord to bring any slack inside the plinth to reduce the risk of it tangling behind the product.

2. Connect to outlet and turn power on.

PUSH INTO CAVITY

1. Push product in until the depth gauges touch the front of the alcove. Ensure power cord is not trapped.

ADJUST HEIGHT

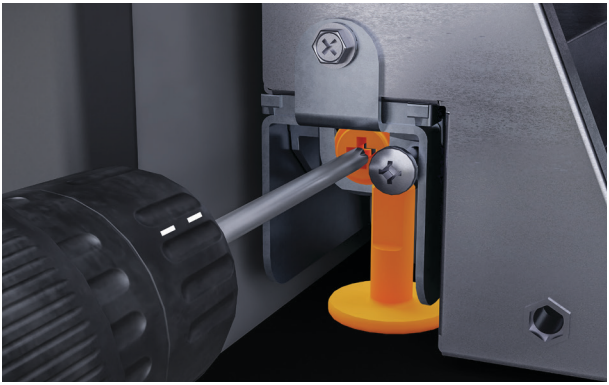

1. Adjust the front of the product by turning the left-hand screw anti-clockwise to lower the feet.

We recommend marking a drill and counting the number of turns required to fully engage the feet.

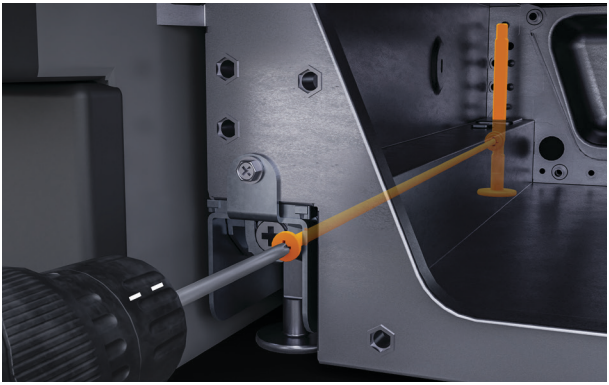

2. Adjust the rear of the product by turning the right-hand screw anti-clockwise to lower the feet.

We recommend matching the number of turns from the previous step. Ensure the upper bracket touches the alcove.

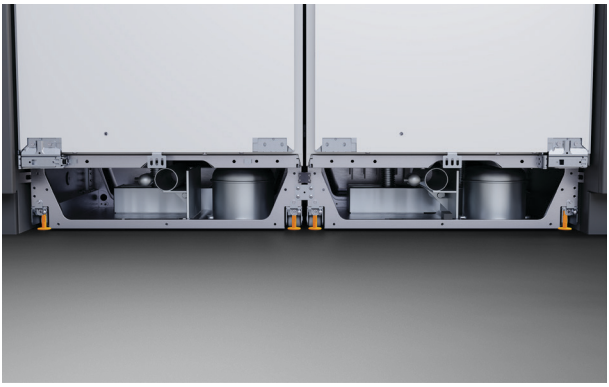

3. Multiple product installations

Adjust the outside front feet followed by the outside rear feet. Once product is set in cavity, lower the central feet.

Ensure the upper bracket touches the alcove.

ADJUST HEIGHT

4. Ensure all depth gauges are flush to the front of the alcove and front of door is level.

We recommened using a spirit level for accuracy.

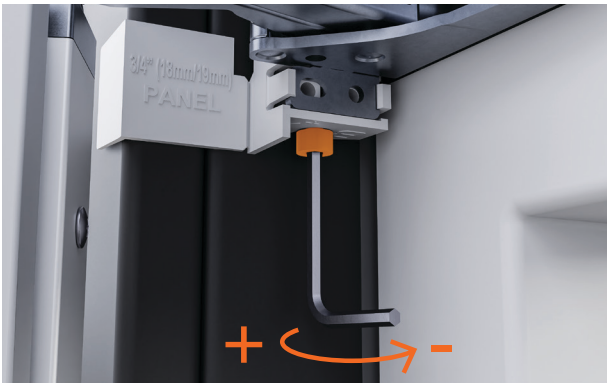

5. Open the door and use the supplied hex key to expand the upper spacer to create an even gap between product and alcove.

Install kit D

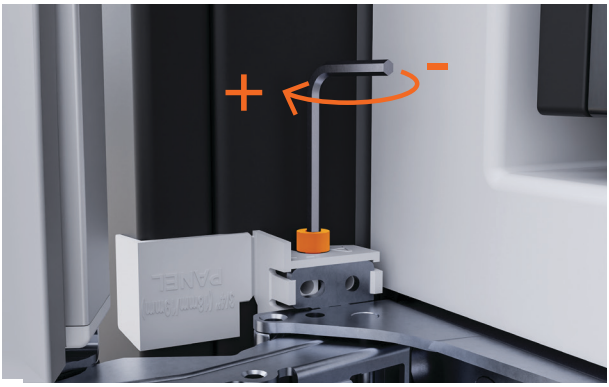

6. Expand the lower spacer to create an even gap between product and alcove.

Install kit D

SECURE

1. Using two supplied long Phillips screws, secure the lower hinge to the cavity

Install kits B

2. Using one supplied short Phillips screw, secure the lower right side of the product to the cavity.

Install kits E

3. Using one supplied short Phillips screws, secure the lower left side of the product to the cavity.

Install kits E

SECURE

4. Using two supplied long Phillips screws, secure the upper hinge to the cavity.

Install kits B

5. Snap the ends off both spacers.

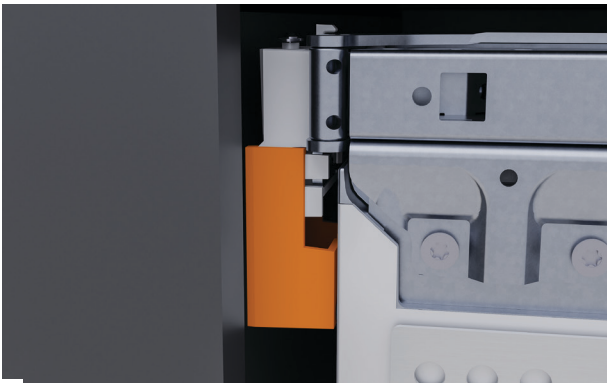

6. Clip covers onto spacers.

7. Ensure cover A is fitted to spacer A and Cover B to spacer B.

Install kit B

8. Unscrew the Phillips screws to remove the depth gauges.

DOOR PANEL PREP (CUSTOM PANEL)

fisherpaykel.com/specify

1. Recheck the door panel specifications. Ensure all bracket locations have been marked.

Refer to the Planning Guide for details.

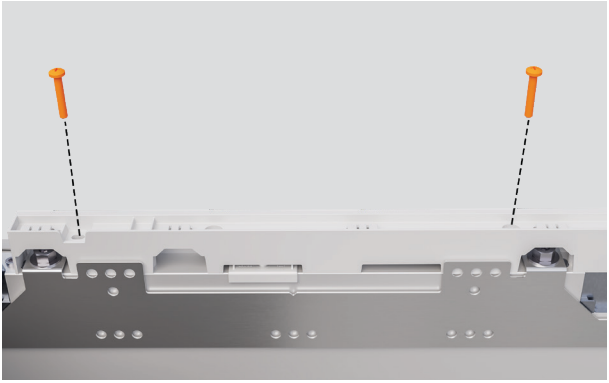

2. Unscrew the two Phillips screws to remove the top cover.

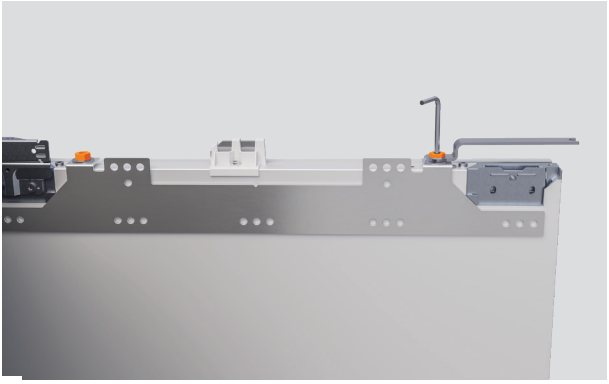

3. Remove both washers and nuts and set aside. Lift the panel bracket outwards to remove.

DOOR PANEL PREP (CUSTOM PANEL)

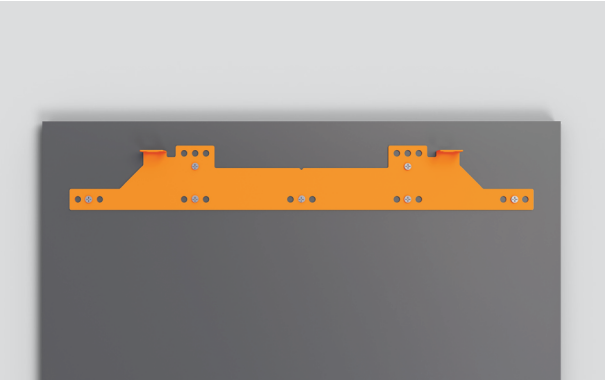

4. Align the door panel bracket to the panel. Secure using the supplied screws.

Install kit G

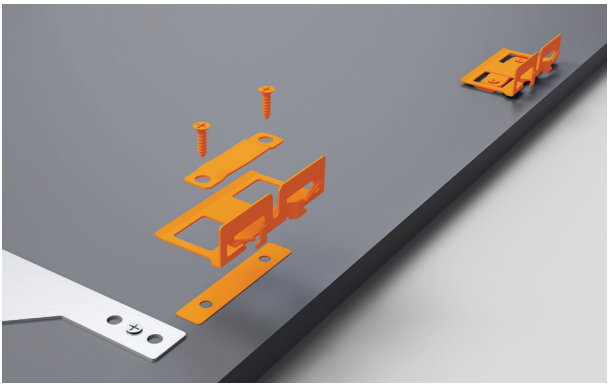

5. Align the side brackets to the panel. Secure using the supplied screws. Ensure brackets are fitted tightly and the fasteners are secured straight.

Install kit F & G

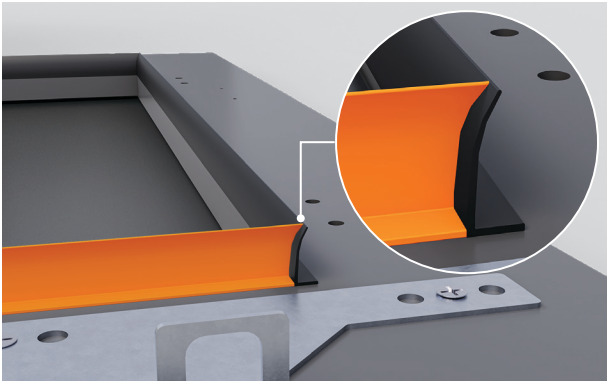

6. Glass door installations

Fit the supplied rubber trims around the window cut-out on the rear of the door panel. Ensure trims are flush with the inside edge.

Trim kit

DOOR PANEL PREP (CUSTOM PANEL)

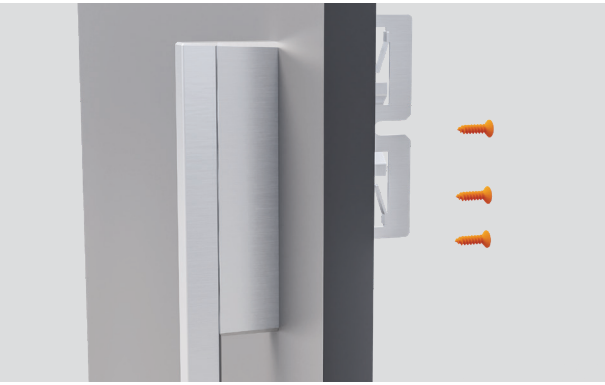

7. Fit the handle to the panels using four M5x25 hex screws. Ensure handle fixings do not interfere with side brackets.

DOOR PANEL PREP (PRE-FINISHED PANEL)

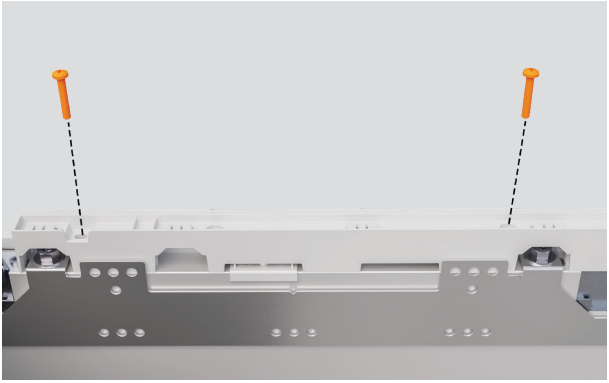

1. Unscrew the two Phillips screws to remove the top cover.

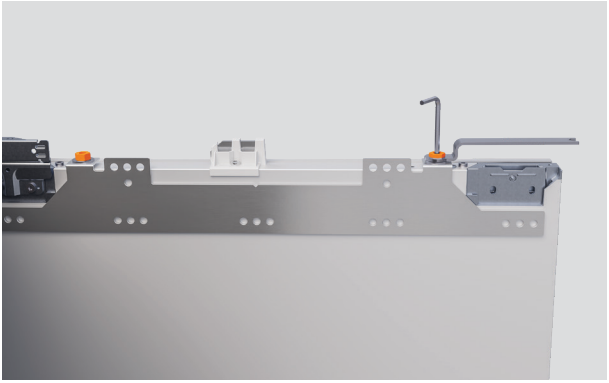

2. Remove both washers and nuts and set aside. Lift the panel bracket outwards to remove.

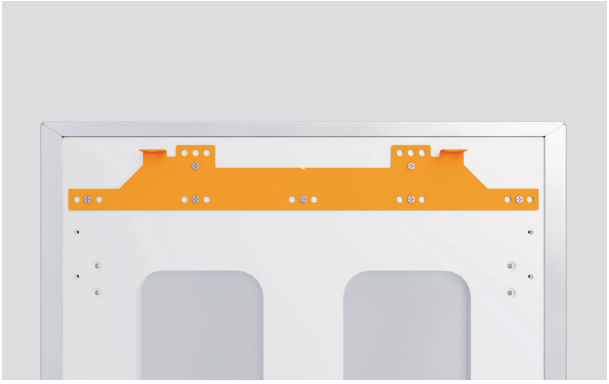

3. Remove all blue tape from the panel.

Align the door panel bracket to the panel. Secure using the supplied screws.

Install kit G

DOOR PANEL PREP (PRE-FINISHED PANEL)

4. Align the side brackets to the panel. Secure using the supplied screws. Ensure brackets are fitted tightly and the fasteners are secured straight.

Install kit G

5. Fit the handle to the panels using four M5x25 hex screws.

ALIGN DOOR PANEL

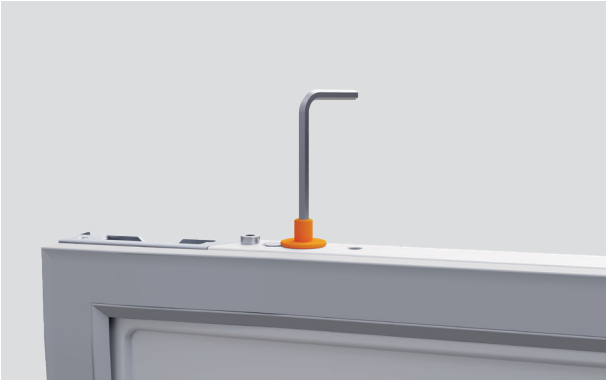

1. Ensure top mounting screws have been loosened and sit at their lowest position

Install kit D

2. Lower the door panel onto the mounting screws

3. Fit a tab to the door to assist with opening.

ALIGN DOOR PANEL

4. Ensure side brackets are disengaged and top mounting screws have been loosened.

Rotate the mounting studs clockwise to lower the panel and anti-clockwise to raise it.

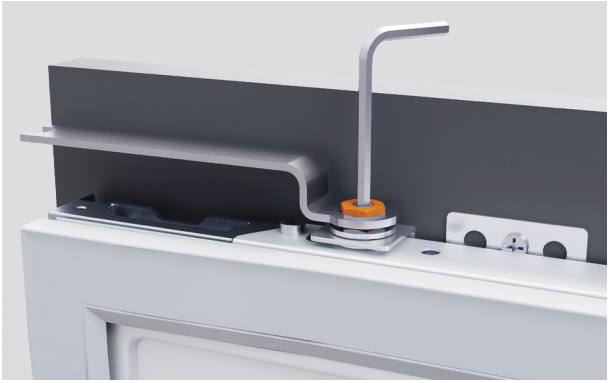

5. Loosely tighten the side screws and the top M8 washers using the spanner and L key provided in the install kit.

Install kit D

6. Push panel side-to-side to adjust horizontally. Ensure panels are flush with the front of the cabinet.

ALIGN DOOR PANEL

7. Fit side screws to panel using the short Phillips tool provided.

90° door opening installations

Use the supplied Phillips key to fit the side screws on the hinge-side.

Install kit D

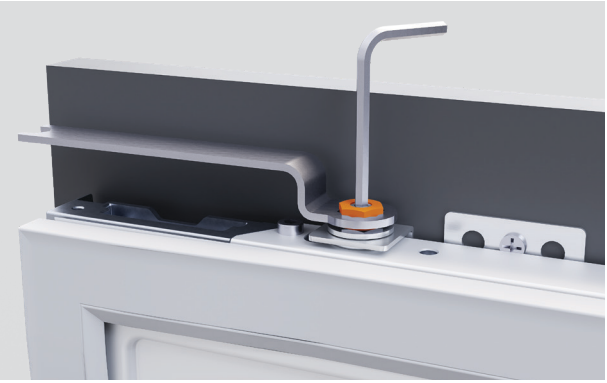

8. Tighten the M8 washers using the supplied spanner and hex key.

Install kit D

SECURE DOOR PANEL

1. With the door open, loosen the lower bracket screw. Adjust bracket to rest against the door panel. Re-tighten the bracket screw.

2. Fit an additional screw through the bracket to lock panel into position.

Install kit E

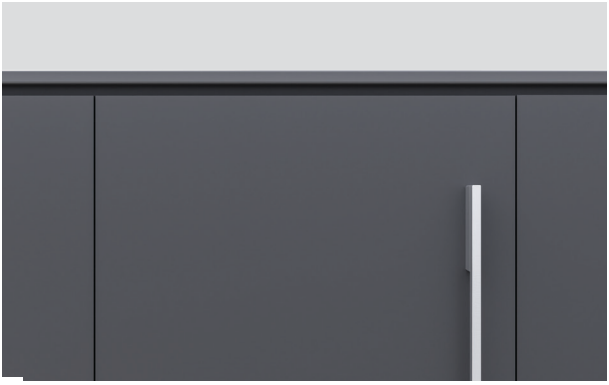

3. Recheck all gaps and any clashing.

FIT TRIMS

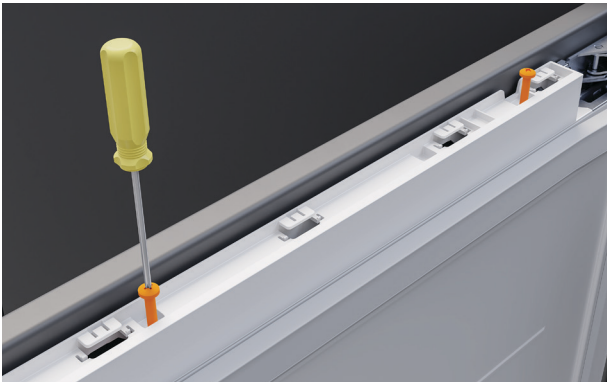

1. Fit the top cover using two supplied Phillips screws. Ensure the flat side faces away from the panel.

2. Locate the shorter door trim to the hinge-side of the product and slide down to clip into place.

Trim kit

3. Locate the longer door trim to the non-hinge-side of the product and slide down to clip into place.

Trim kit

FIT TRIMS

4. Fit the trim onto the top cover.

Trim kit

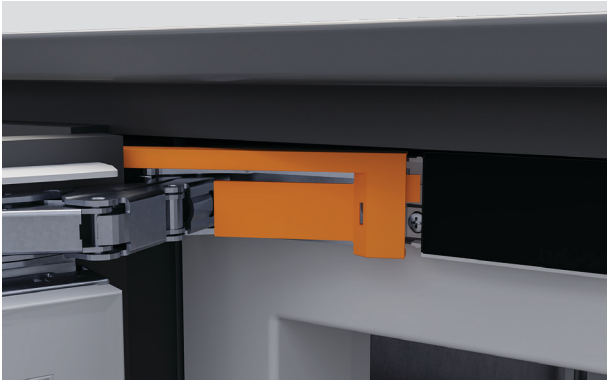

5. Insert the upper hinge cover tab into the display panel until it audibly clicks into place.

Gently push the trim until it is flush with the display.

Install kit H

6. Repeat for the upper bracket cover.

Install kit H

7. Hinge swap installations:

Swap the lower hinge covers.

Avoid swapping hinge covers between models as covers differ between beverage and wine models.

INSTALL CENTRE TRIM (MULTIPLE PRODUCT INSTALLATIONS)

1. Locate the centre trim between products and push into position. Ensure the lower part of the trim clears the grille.

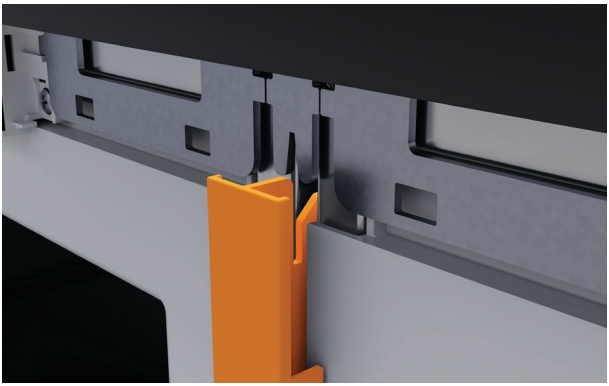

2. Slide trim up to slot into the upper bracket.

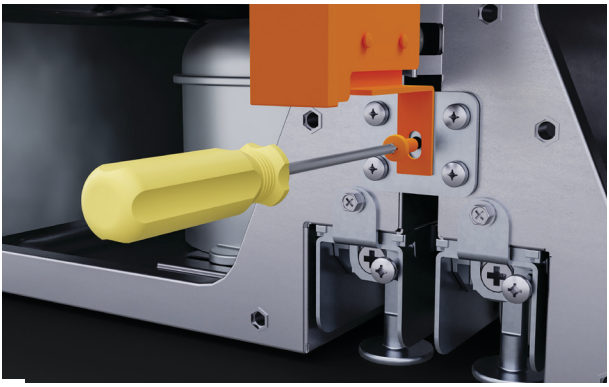

3. Ensure the top of the trim touches the alcove before securing using the supplied fastener.

Joiner kit A

REFIT GRILLE

1. Open the cover and align the grille to the product. Slot into place starting with the base of the grille.

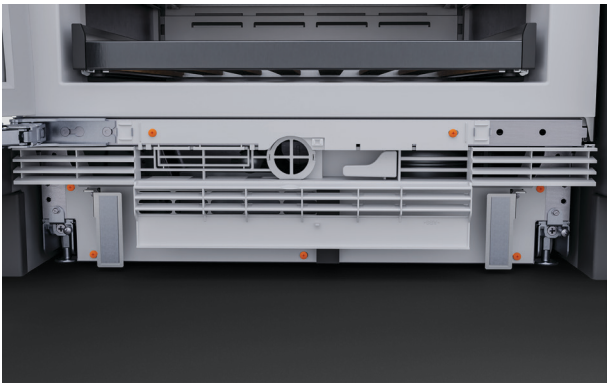

2. Hand tighten the top left screw, followed by the top right screw. Fit the remaining five screws on the grille to secure.

Close the grille flap.

PREPARE TOE KICK

fisherpaykel.com/specify

1. Recheck toe kick panel specifications.

Refer to the Planning Guide for details.

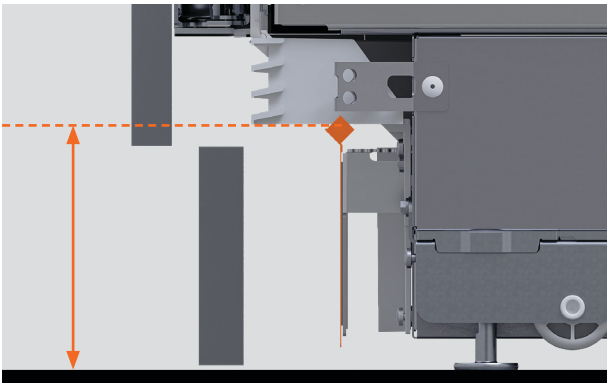

2. Measure the distance from the floor to the bottom of the grille to determine the position of the toe kick mounting plate.

3. Secure mounting plate to the panel using the supplied screws.

Install kit G

SECURE TOE KICK

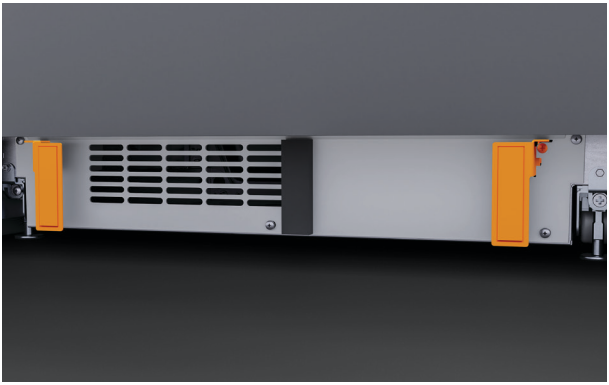

1. Loosen the screws on both toe kick brackets and slide brackets forward.

Re-tighten screws slightly.

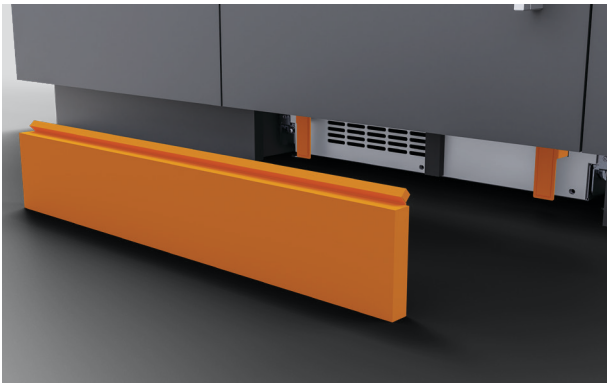

2. Locate the toe kick to the magnetic brackets to secure. Adjust the toe kick to the desired depth.

3. Remove the toe kick and hand-tighten the bracket screws.

SECURE TOE KICK

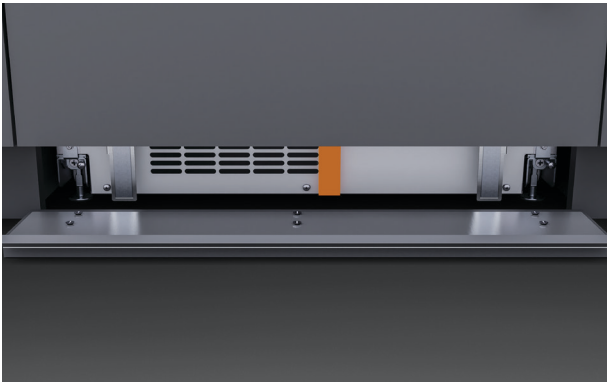

4. If toe kick depth is less than 3 9/16" (90mm)

Attach the supplied foam block to the centre of the panel.

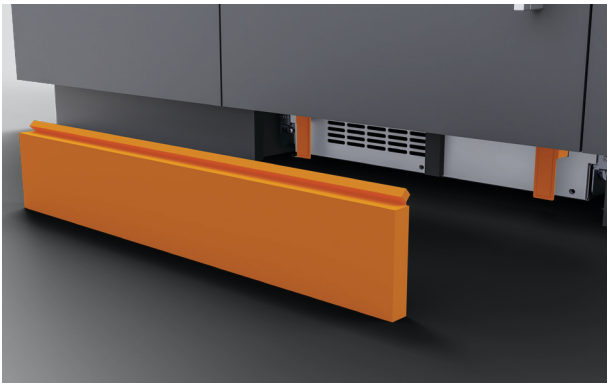

5. Refit the toe kick.

SECURE FLOW DIVIDER

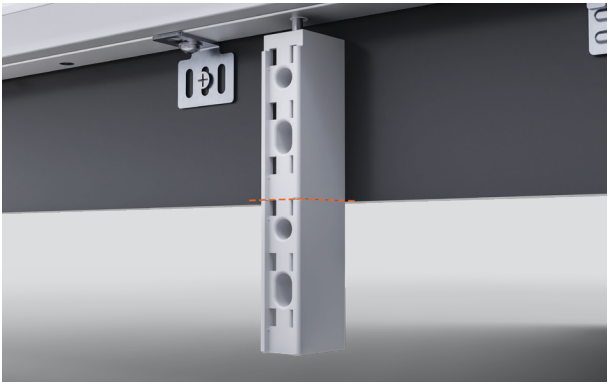

1. With the door open, align flow divider to base of door. Using either a hacksaw or side cutters, cut divider to ensure it doesn't extend below the door panel.

Install kit D

2. Slot flow divider onto the screw at the base of the door. Secure using the supplied screws.

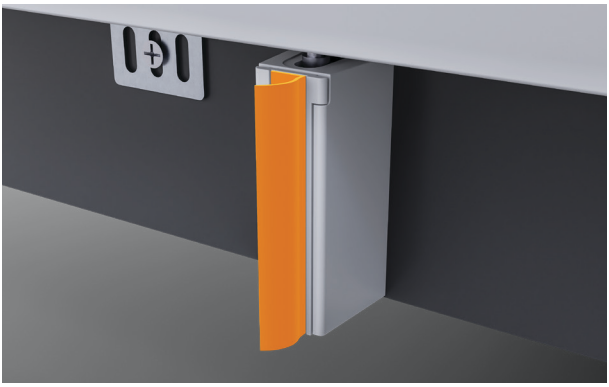

3. Using a box cutter, trim the supplied seal to length and clip onto the flow divider.

EXIT INSTALL MODE

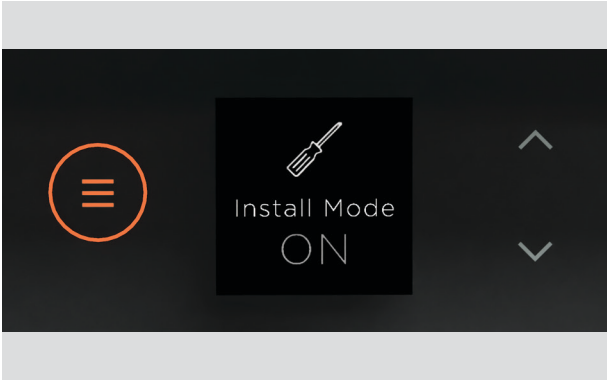

1. Press and hold ≡ to exit install mode

INSTALLER CHECKLIST

- [ ] Ensure Installer Mode has been exited.
- [ ] All levelling feet have been adjusted and engaged.
- [ ] Panel gaps and any potential clashing points have been checked.
- [ ] All trims have been secured at all attachment points.
- [ ] Covers are in place.
- [ ] Product is robustly attached to cabinetry.
- [ ] If required, hinge limiting pins have been fitted.

Complete and keep for safe reference:

Model _____

Serial no. _____

Purchase date _____

Purchaser _____

Dealer address _____

Installer's name _____

Installer's signature _____

Installation company _____

Installation date _____

FISHERPAYKEL.COM

© Fisher & Paykel Appliances 2024. All rights reserved.

The models shown in this guide may not be available in all markets and are subject to change at any time.

The product specifications in this guide apply to the specific products and models described at the date of issue. Under our policy of continuous product improvement, these specifications may change at any time.

For current details about model and specification availability in your country, please go to our website or contact your local Fisher & Paykel dealer.