FISHER & PAYKEL

MODULAR COOKTOP

FLUSH AND PROUD INSTALLATION

MULTIPLE PRODUCT WITH OVERHEAD VENTILATION

CI365DTTB1, CI304DTTB1, CI244DTTB1, CI152DTTB1, CI152DB1, CI122DB1, CIT122DX1, CIT152DX1, CG151DLPGB5, CG151DNGGB5 models

INSTALLATION GUIDE

⚠ WARNING!

If the information in this manual is not followed exactly, a fire or explosion may result causing property damage, personal injury or death.

Do not store or use gasoline or other flammable vapors and liquids in the vicinity of this or any other appliance.

NEVER use this appliance as a space heater to heat or warm the room. Doing so may result in carbon monoxide poisoning and overheating of the appliance.

What to Do if you Smell Gas

- Do not try to light any appliance.
- Do not touch any electrical switch.
- Do not use any phone in your building.
- Immediately call your gas supplier from a neighbor's phone. Follow the gas supplier's instructions.
- If you cannot reach your gas supplier, call the fire department.

Installation and service must be performed by a qualified installer, service agency or the gas supplier.

⚠ WARNING!

Never operate the top surface cooking section of this appliance unattended.

- Failure to follow this warning statement could result in fire, explosion or burn hazard that could cause property damage, personal injury or death.
- If a fire should occur, keep away from the appliance and immediately call your fire department. Do not attempt to extinguish an oil/grease fire with water

⚠ WARNING!

Hot Surface Hazard

Failure to follow this advice may result in death.

- DO NOT TOUCH SURFACE UNITS OR AREAS NEAR UNITS – Surface units may be hot even though they are dark in color.
- During use, accessible parts of this appliance will become hot enough to cause burns.
- Do not let body, clothing or any item other than suitable cookware contact with the ceramic glass until the surface is cool.
- Never leave metal objects (such as kitchen utensils) or empty pans on the cooktop as they can become hot very quickly.
- Beware: magnetisable metal objects worn on the body may become hot in the vicinity of the induction cooktop. Gold or silver jewellery will not be affected.
- Keep children away.
- Handles of saucepans may be hot to touch. Check saucepan handles do not overhang other cooking zones that are on. Keep handles out of reach of children.
- Failure to follow this advice could result in burns and scalds.
- Do not touch the cooktop components, burners, pan supports or the stainless steel surfaces when hot.
- Before cleaning, turn the burners off and make sure the whole cooktop is cool.

⚠ WARNING!

Electric Shock Hazard

Failure to follow this advice may result in electric shock or death.

- Do not cook on a broken or cracked cooktop. If the cooktop surface should break or crack, switch the appliance off immediately at the mains power supply (wall switch) and contact a qualified technician.
- Switch the cooktop off at the wall before cleaning maintenance.

⚠ WARNING!

Fire Hazard

Failure to follow this advice may result in serious burns or death.

- Unattended cooking on a hob with fat or oil can be dangerous and may result in fire.
- NEVER try to extinguish a fire with water, but switch off the appliance and cover flame, eg with a lid or fire blanket, or use dry chemical or foam-type extinguisher.
- Do not store items on cooking surfaces.
- Never leave the appliance unattended when in use.
- Boilover causes smoking and greasy spillovers that may ignite.

⚠ WARNING!

Cut Hazard

Failure to use caution could result in injury.

- The razor-sharp blade of a cooktop scraper is exposed when the safety cover is retracted. Use with extreme care and always store safely and out of reach of children.

⚠ WARNING!

Explosion Hazard

Failure to use caution could result in injury or death.

- Do not use or store flammable materials such as gasoline near the appliance.
- Do not spray aerosols in the vicinity of this appliance while it is in operation.

⚠ WARNING!

Poisoning Hazard

Failure to use caution could result in poisoning or death.

- Never use this appliance as a space heater to heat or warm the room. Doing so may result in carbon monoxide poisoning and overheating of the appliance.

⚠ WARNING!

Health Hazard

Failure to follow this advice may result in death.

- This appliance complies with electromagnetic safety standards. However, persons with cardiac pacemakers or other electrical implants (such as insulin pumps) must consult with their doctor or implant manufacturer before using this appliance to make sure that their implants will not be affected by the electromagnetic field.

READ AND SAVE THIS GUIDE

To reduce the risk of fire, injury to persons or damage when using the appliance, follow the important safety instructions listed below. Read all the guidance before using the appliance. Ensure your appliance is properly installed and grounded by a qualified technician.

Installation

- Ensure the appliance is properly installed and earthed by a qualified technician.
- Ensure this cooktop is connected to a circuit that incorporates an isolating switch providing full disconnection from the power supply.
- Ensure the appliance is electrically grounded in accordance with local codes or, in absence of local codes, with the National Electrical Code, NFPA 70 or the Canadian Electric Code, CSA C22.1-02.
- Do not install or operate the appliance if it is damaged or not working properly. If you receive a damaged product, contact your dealer or installer immediately.
- This appliance must be installed and connected to the mains power supply only by a suitably qualified person according to these installation instructions and in compliance with any applicable local building and electricity regulations. Failure to install the appliance correctly could invalidate any warranty or liability claims.
- Warning: This appliance must be installed by a licensed plumber or gas fitter when within the Commonwealth of Massachusett.
- The appliance and its individual shut-off valve must be disconnected from the gas supply piping system during any pressure testing at test pressures in excess of 1/2 psi (3.5 kPa).
- The installation must conform with local codes or, in the absence of local codes, with the National Fuel Gas Code ANSI Z223.1/NFPA 54 or, in Canada, the Natural Gas and Propane Installation Code, CSA B149.1.
- Ensure the appliance is fitted with correct ventilation in accordance with Canadian Electric Code CSA B149.

General Use

- Never leave the appliance unattended when in use. Boilover causes smoking and greasy spillovers that may ignite.
- Never use your appliance as a work or storage surface.
- Wear proper apparel — Loose-fitting or hanging garments should never be worn while using the appliance.
- Do not leave any magnetic item, e.g. cutlery, roast dish, etc. on your cooktop, including the cooking zones and user interface.
- Do not place or leave any magnetisable objects (eg credit cards, memory cards) or electronic devices near the appliance, as they may be affected by its electromagnetic field.
- We recommend using plastic or wooden kitchen utensils for cooking with your induction cooktop.
- Storage in or on appliance — Flammable materials should not be stored near surface units.
- Do not place metallic objects such as knives, forks, spoons and lids on the cooktop surface since they can get hot.
- Do not place or leave aluminium foil on the cooktop.
- Never use your appliance for warming or heating the room.
- Do not use water on grease fires – Smother fire or flame or use dry chemical or foam-type extinguisher.
- Use only dry potholders — Moist or damp potholders on hot surfaces may result in burns from steam. Do not let potholder touch hot heating elements. Do not use a towel or other bulky cloth.
- Use proper pan size — This appliance is equipped with one or more surface units of different size. Always place small pans in the centre of the cooking zone. Select utensils having flat bottoms large enough to cover the surface unit heating element. The use of undersized utensils will expose a portion of the heating element to direct contact and may result in ignition of clothing. Proper relationship of utensil to burner will also improve efficiency.
- After use, always turn off the cooking zones and the cooktop as described in this guide (ie by using the touch controls). Do not rely on the pan detection feature to turn off the cooking zones when you remove the pans.
- Do not use a steam cleaner to clean your cooktop.
- Do not place or drop heavy objects on your cooktop.
- Do not stand on your cooktop.
- Do not use pans with jagged edges or drag pans across the ceramic glass surface as this can scratch the glass.
- Do not use scourers or any other harsh/abrasive cleaning agents to clean your cooktop, as these can scratch the ceramic glass.
- Do not operate your cooktop by means of an external timer or separate remote-control system.
- Do not cook on broken cooktop — If cooktop should break, cleaning solutions and spillovers may penetrate the broken cooktop and create a risk of electric shock. Contact a qualified technician immediately.
- Do not wear loose fitting or hanging garments when using the appliance. They could ignite or melt if they touch a hot surface and you could be burned.
- Utensil handles should be turned inward and not extend over adjacent surface.
- For your safety, never allow flames to extend beyond cookware or curl up its sides. Adjust the heat accordingly if this happens.
- Do not sit, stand, or lean on your appliance.
- Caution: Installing storage cabinets above your appliance may cause a hazard.

- The Governor of California is required to publish a list of substances known to the state of California to cause cancer or reproductive harm and requires businesses to warn customers of potential exposures to such substances.
- Do not obstruct the flow of combustion and ventilation air when using this product.

Child Safety

- Do not allow children to play with the appliance or sit, stand, or climb on it.
- Do not store items of interest to children in cabinets above the appliance. Children climbing on the cooktop could be seriously injured.
- Do not leave children alone or unattended in the area where the appliance is in use. Children of less than 8 years old must be kept away from the appliance unless continuously supervised. This appliance can be used by children aged from 8 years and above, and persons with reduced physical, sensory or mental capabilities or lack of experience and knowledge, if they have been given supervision or instruction concerning the use of the appliance in a safe way and they understand the hazards involved. Cleaning and user maintenance shall not be done by children without supervision.

Cleaning

- Clean cooktop with caution — If a wet sponge or cloth is used to wipe spills on a hot cooking area, be careful to avoid steam burn. Some cleaners can produce noxious fumes if applied to a hot surface.

Servicing

- Do not repair or replace any part of the appliance unless specifically recommended in the user guide. All other servicing should be undertaken be a Fisher & Paykel trained and supported service technician or qualified person.
- If the power supply cable is damaged, it must only be replaced by a qualified technician.
- If the appliance is malfunctioning, then contact your Authorized Service Center or Customer Care to arrange for service. Do not use your appliance until it has been repaired by a Fisher & Paykel trained and supported service technician or qualified person.
- Leak testing of the appliance should be conducted according to the installation guide for this product.

Standard Requirements

- This induction cooktop generates and uses ISM frequency energy that heats cookware by using an electromagnetic field. It has been tested and complies with Part 18 of the FCC Rules for ISM equipment. This induction cooktop meets the FCC requirements to minimize interference with other devices in residential installation. Induction cooktops may cause interference with television or radio reception. If interference occurs, the user should try to correct the interference by:
  - Relocating the receiving antenna of the radio or television
  - Increasing the distance between the cooktop and the receiver
  - Connecting the receiver into an outlet different than the receiver.

COMPONENTS REQUIRED

Supplied: Induction Cooktop and Teppanyaki

- [ ] Communication cable (1)
- [ ] Shims (6)
- [ ] T spacer (2)
- [ ] Securing brackets (4)
- [ ] Clamp screws (4)
- [ ] Joiner kit (supplied with auxiliary modules only)

Supplied: Gas Cooktop

- [ ] Shims (6)
- [ ] T spacer (2)
- [ ] Securing brackets (4)
- [ ] Clamp screws (4)
  Two lengths supplied
- [ ] Joiner kit (1)
- [ ] Foam sealing tape (1)
- [ ] Gas regulator (1)
- [ ] Gas elbow (1)
- [ ] Gas seal washer (1)
- [ ] Trviet (quantity varies)

Not supplied

- [ ] Silicone gun
- [ ] Phillips screwdriver
- [ ] Level
- [ ] Box cutter
- [ ] Router
- [ ] Hex key
- [ ] Spanner
- [ ] Masking tape
- [ ] Black installations:
  Black, matte finish silicone rated to 210°F (100°C) or above**
- [ ] Grey installations:
  Grey, matte finish silicone rated to 210°F (100°C) or above***

**Recommendation: Maxisil N30 Matte Black | ***Recommendation: Maxisil A13 Anthracite

ACCESSING YOUR PRODUCT SPECIFICATIONS

For full product, cabinetry and service specifications, refer to the Planning Guide. To access the Planning Guide, scan the QR code or visit fisherpaykel.com/specify. Search by appliance type, product name or model code.

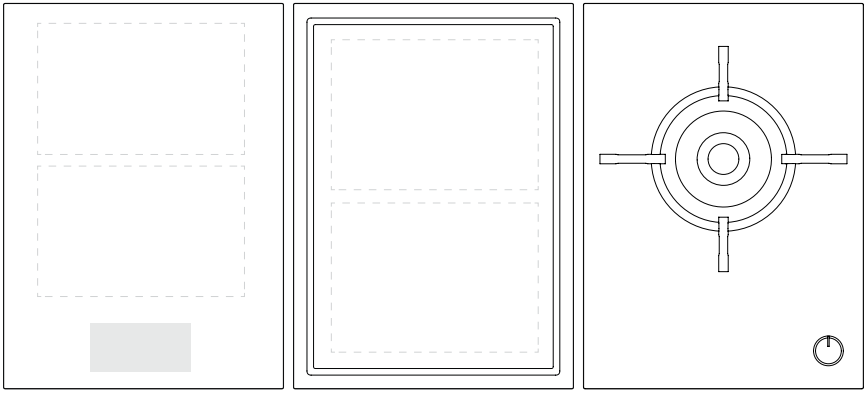

Sample configuration

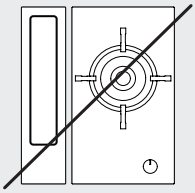

IMPORTANT NOTE

Modular Ventilation cannot be used alongside a gas cooktop.
Refer to the planning guide for more information.

CHECK CLEARANCES

IMPORTANT NOTE

Gas on Glass modules have greater clearance requirements compared to Induction and Tepanyaki modules. For multi-product installations ensure clearances are achieved for the product with the greater clearance requirements.

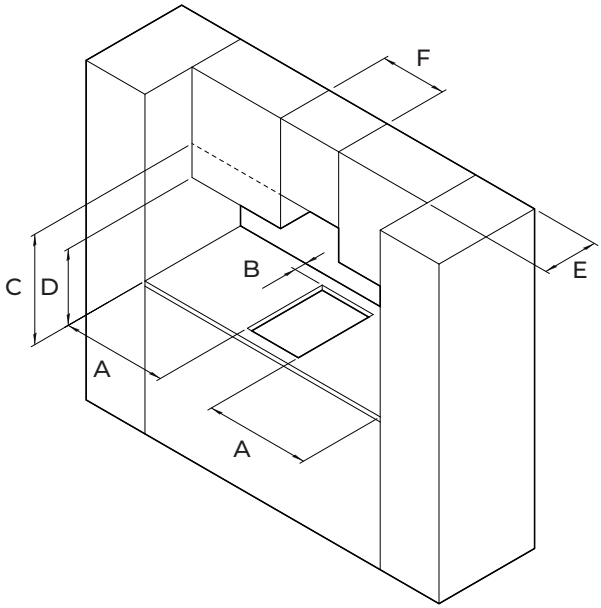

CABINETRY CLEARANCE DIMENSIONS		INDUCTION & TEPANYAKI		GAS ON GLASS	
		IN	MM	IN	MM
A	Minimum clearance from side edges of cutout to nearest combustible surface	1 3/16	29	4 3/4	120
B	Minimum clearance from rear edge of cutout to nearest combustible surface	7/8	21	3 3/8	85
C	Minimum clearance from countertop to: Overhead cabinet centered above the cooktop (unprotected) Overhead cabinet centered above the cooktop (protected) Range hood	24	610	30	724
D	Minimum clearance from countertop to overhead cabinet not directly above cooktop	18	457	18	457
E	Maximum depth of overhead cabinetry	13	330	13	330
F	Minimum distance between overhead cabinets (not centered above cooktop)	combined cooktop width		combined cooktop width	

CHECK CLEARANCES

VENTILATION OVERVIEW

The Induction and Tepanyaki modules require ventilation to allow cooling of the electronic components within the chassis. When multiple products are installed their individual ventilation requirements must also be combined.

For detailed ventilation guidance, refer to the planning guide.

VENTILATION OPTION 1

INTAKE VIA SERVICE CHANNEL
Air is drawn up from the kick cavity through service channel at rear of cabinetry. If cavities are sealed, ventilation holes in toe kick panel are required.

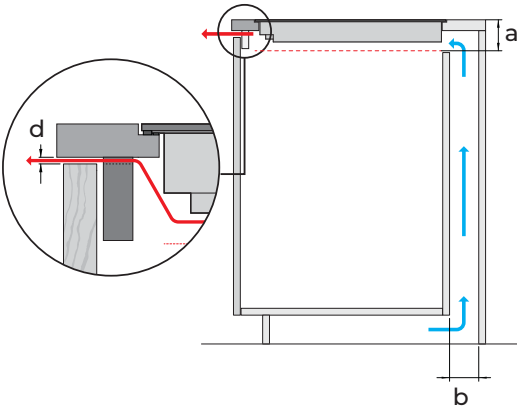

CLEARANCE REQUIREMENTS	in	mm
A Clearance below chassis from top of cook surface		
Induction 12", 15"	2 7/8	72
Induction 24", 30", 36"	3 5/8	91
Teppanyaki 12", 15"	3 7/16	86
Gas on Glass 15"	3	76

VENTILATION REQUIREMENTS				
INTAKE at rear	**in**	**mm**	**in²**	**cm²**
B via service channel, min depth	13/16	20	-	-
C through adjacent cabinets, per side wall*	2x Ø2"	2x Ø50	6.2	40
OUTLET at front				
D 3/16" (4mm) gap along width of chassis				
12"	10 1/16 x 3/16	255 x 4	1.6	10
15"	13 3/8 x 3/16	340 x 4	2.2	14
24"	21 7/8 x 3/16	555 x 4	3.4	22
30"	29 15/16 x 3/16	715 x 4	4.7	30
36"	33 11/16 x 3/16	855 x 4	5.3	34

* Vents with equivalent-sized area possible. Must be positioned in front of product.

VENTILATION OPTION 2

INTAKE VIA ADJACENT CABINETS
2x Ø50 holes are required in each side wall through to adjacent cabinets. Total of 4x holes required.

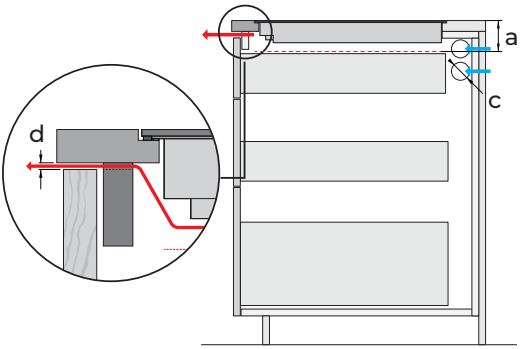

PRIOR TO INSTALLATION

fisherpaykel.com/specify

1. Ensure cabinetry and servicing specifications have been met and clearances have been considered.

Refer to the Planning Guide for details.

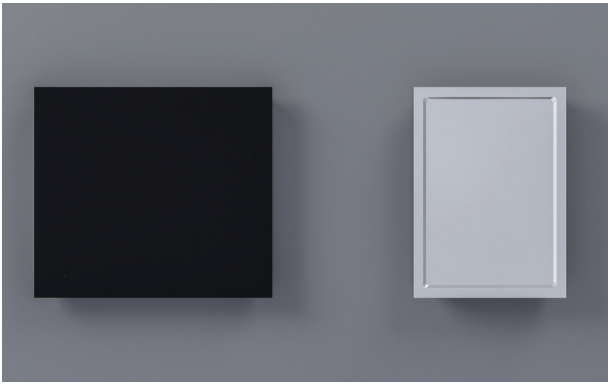

2. Ensure all products and accessories are present.

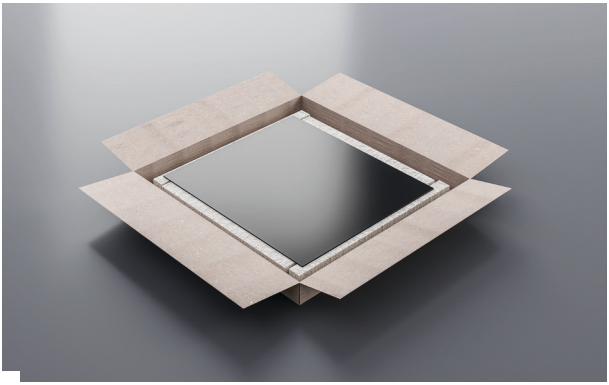

3. Carefully remove products from cartons. Set aside on a protected surface.

Dispose of packaging responsibly.

PREPARE GAS COOKTOP

1. Fit the elbow and washer to the floating nut. Turn the cooktop over carefully and place onto a protected surface.

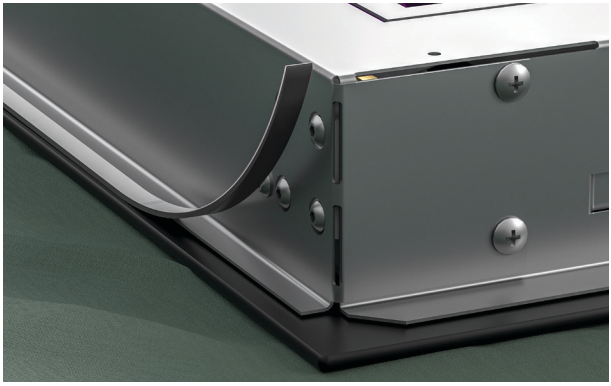

2. Apply adhesive foam seal around the glass overhang, 5mm from the edge of the glass.

Ensure the adhesive side is facing down to form a continuous seal.

Trim any excess seal using a sharp knife taking care not to damage the cooktop or surface.

INSTALL IN CUTOUT

1. Remove foam tape backing before gently lowering the first product into the cutout.

2. Align the rear of the joining bracket to the back edge of the cutout and slot into place..

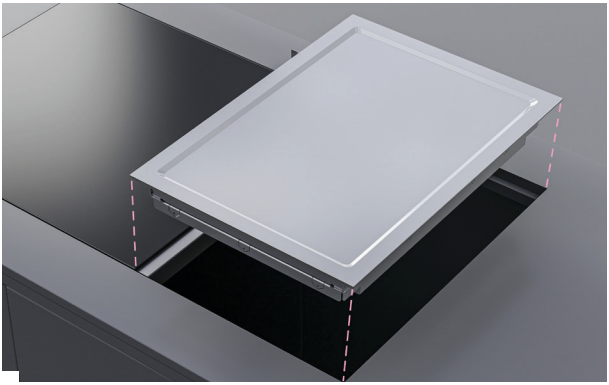

3. Gently lower additional products and joining strips into cutout as required.

Take care not to damage the foam tape when moving products.

ALIGN PRODUCTS

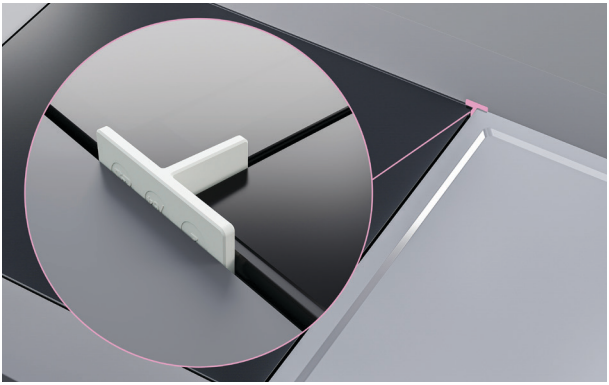

1. Slot the T spacers between the products. Adjust positioning to ensure even spacing between products is achieved.

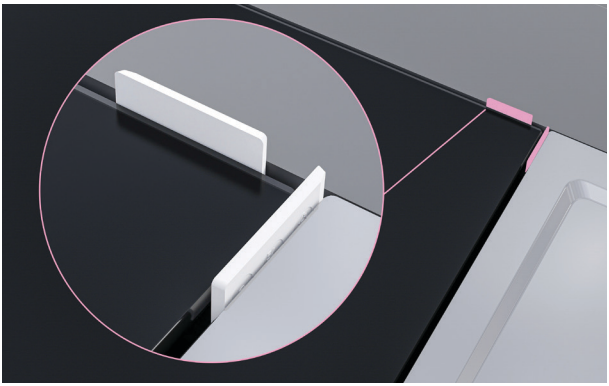

2. Flush installations:

Place the shims around the outer edges of the cutout. Adjust positioning to ensure even spacing around the product set is achieved.

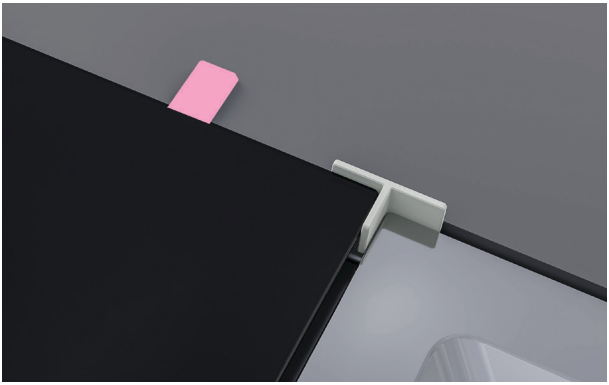

3. Place the shims on top of the product to gauge what thickness is required to create a level installation.

Slot the shims under the product flanges to raise as needed.

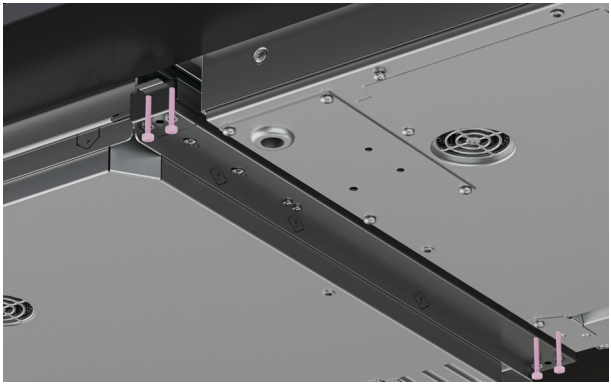

4. Additional minor height adjustments can be achieved by adjusting the screws on the joiner bar.

SECURE TO CUTOUT

1. Fit the securing brackets to the base of each cooktop. For benchtops thinner than 25mm (1"), use the longer clamp screws.

A minimum of two brackets per cooktop is recommended.

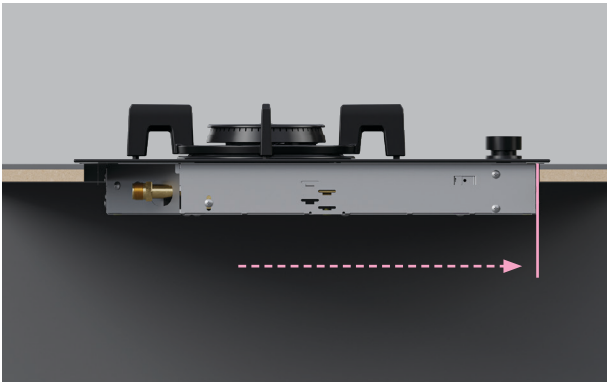

2. Gas Products:

Ensure products are installed towards the front edge of the cutout.

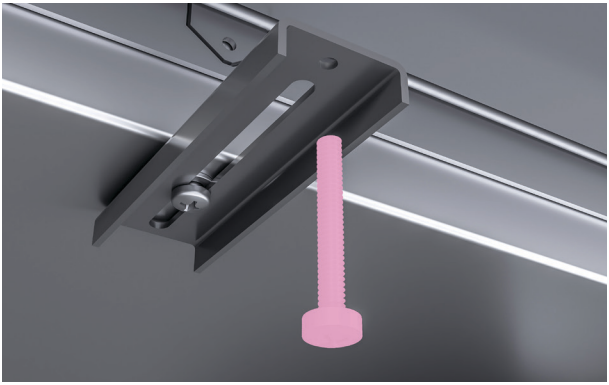

3. Tighten all clamp screws to secure the cooktops to the cutout and joiner strips.

Do not overtighten clamp screws. Screws should only make light contact with cutout and joiner strips.

CONNECT GAS SUPPLY (GAS MODELS ONLY)

Check the safety and warnings section of this guide for gas regulations, requirements and important information before connecting.

1. Fittings must be connected by an authorized technician and comply with local regulations.

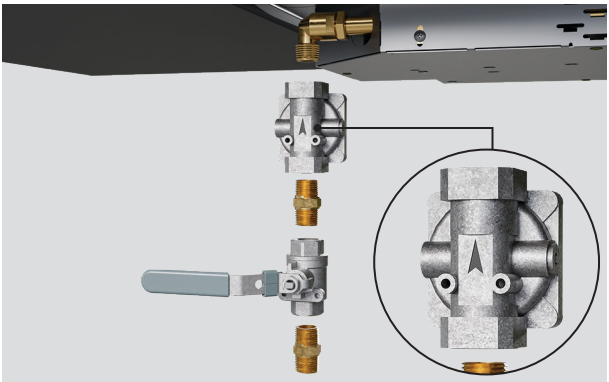

2. Ensure that the regulator arrow points towards the cooktop's inlet pipe, away from the gas supply.

Use threading compound on male threads only.

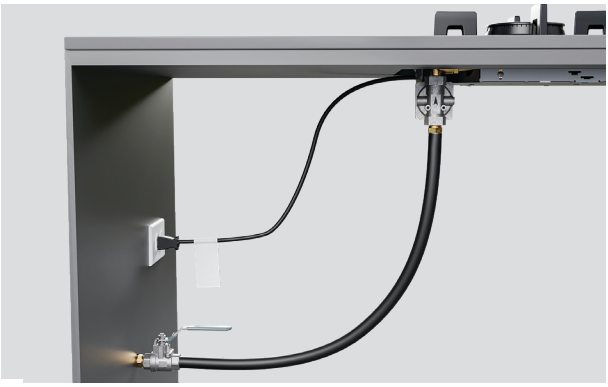

3. Connection: 1/2” NPT female.

Regulated Cooktop's Operating Pressure:

- **LPG:** 11" W.C
- **NG:** 4" W.C

Supply Pressure to Regulator:

- **LPG:** 12" - 14" WC
- **NG:** 5" - 14" WC

LEAK TEST (GAS MODELS ONLY)

1. Turn all dials to the OFF position before opening the valve on the gas supply.

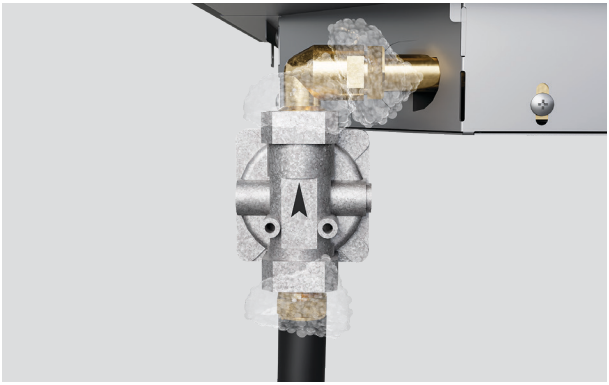

2. Apply a soap solution of 1:1 liquid soap and water to all connections, hoses and fittings from the supply to the connection at the cooktop.

3. If a leak is present, immediately turn off the gas supply, tighten any leaking connections and re-check. If connections continue to leak, try replacing them in case they have become defective or cracked.

If you cannot stop a gas leak, turn off the gas supply and call your local gas utility, or the dealer you purchased the appliance from.

Soap bubbles will appear where gas is escaping.

FIT BURNER AND TRIVETS

1. Ensure all burner parts are correctly fitted.

Flames should burn blue, without yellow tips or fluttering around the burner cap.

2. Place the trivet into the burner skirt recesses, ensuring it is securely positioned. Check that the trivet is level. If necessary, adjust the height of its feet.

CONNECT POWER

Before connecting to the mains power supply check that:

- The domestic wiring system is suitable for the power drawn by the cooktop.
- The voltage corresponds to the value given on the rating plate.
- The power supply cable sections can withstand the load specified on the rating plate.

fisherpaykel.com/specify

Refer to the Planning Guide for full service information.

RATING PLATE LOCATIONS

Gas and Induction Cooktops

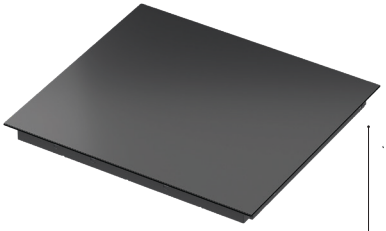

Teppanyaki Cooktops

CONNECT POWER

CG151DGB5 MODELS

These models are supplied with a power cable. The power cable should only be removed or replaced by a Fisher & Paykel trained and supported service technician or qualified person.

CI122D, CI152D, CIT122D, CIT152D MODELS

3 wire cable from power supply

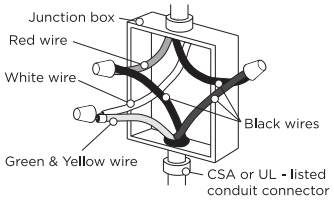

4 wire cable from power supply

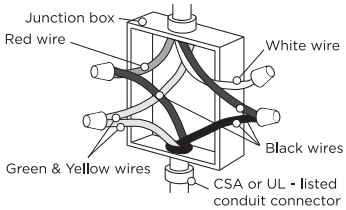

CI244D, CI304D, CI365D MODELS

3 wire cable from power supply

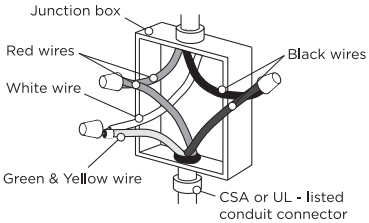

4 wire cable from power supply

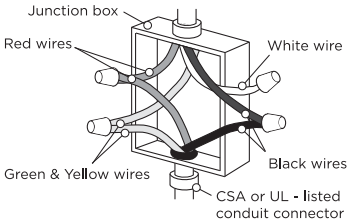

CHECK GAS BURNERS

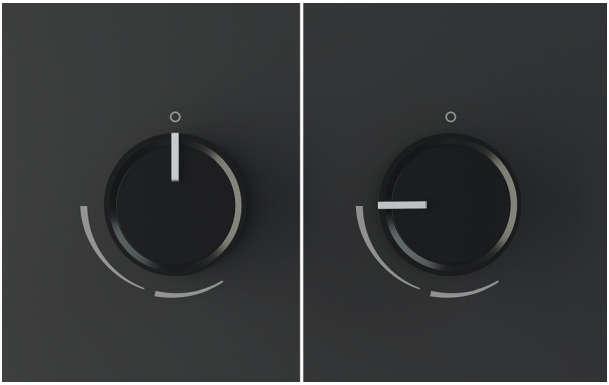

1. Push the dial down and turn counterclockwise to the highest heat setting. Wait until the burner ignites before adjusting to the desired heat setting.

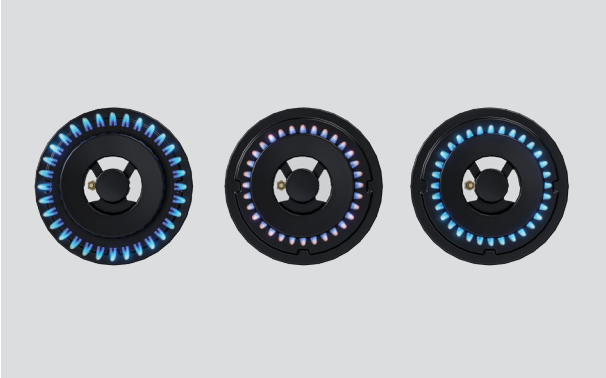

2. Check flames are blue and stable. A yellow flame indicates insufficient air. A noisy flame that lifts away from the burner indicates too much air.

If any abnormality is evident, check that the burner assembly is located properly. Refer to page 22.

3. Turn all dials to the OFF position when done.

LINK PRODUCTS

Note: gas cooktop has an independant control dial and is unable to be paired.

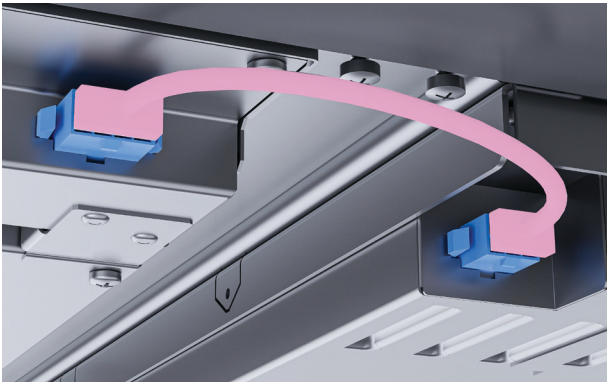

1. Link each product to the adjacent product using the supplied communication cables.

Ensure 8-pin plugs are only connected to 8-pin sockets and 6-pin plugs connected to 6-pin sockets.

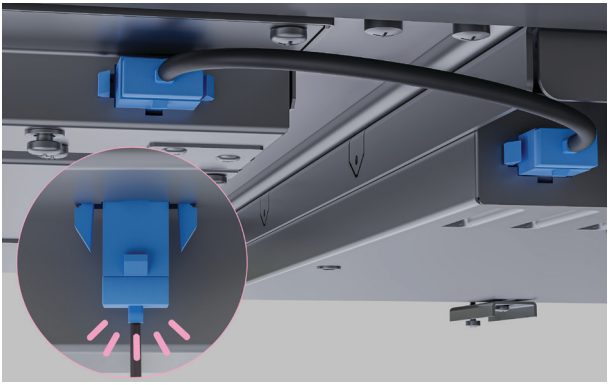

2. Ensure all cables click into place and are routed away from cooktop exhausts.

Secure to cabinetry using the supplied harness retainers.

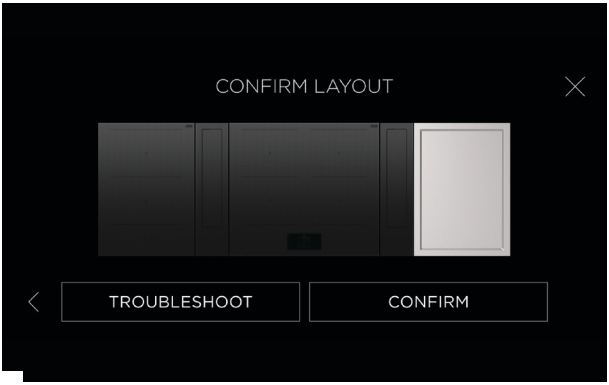

3. Follow the onscreen guidance to confirm product layout.

SEAL PRODUCTS INTO CAVITY

Some silicone products may cause discoloration of the glass, in most cases this will fade as the silicone cures. Avoid applying too much silicon during installation.

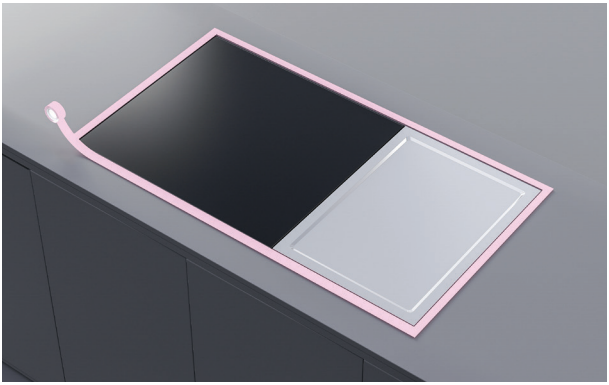

1. Mask the area to be siliconed ensuring all products and the countertop are protected.

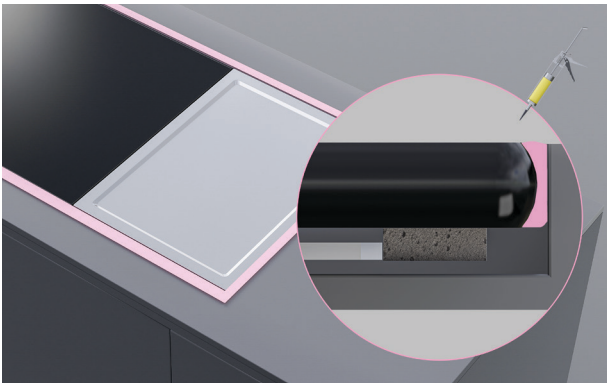

2. Flush installations only:

Carefully apply silicone in the gaps **between the countertop and products**.

Wipe away any excess silicone and remove mask once silicone has dried.

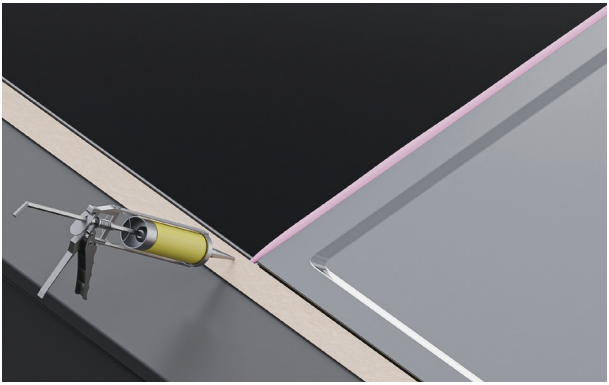

3. Carefully apply silicone in the gaps **between the products**.

Wipe away any excess silicone and remove mask once silicone has dried.

GAS RATE SUMMARY

CG151 MODELS

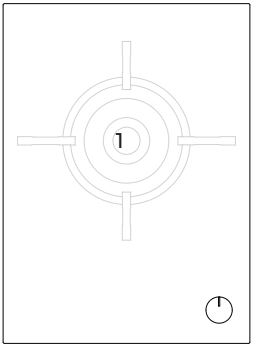

BURNER	GAS TYPE	JET SIZE (MM)	NOMINAL RATING
1 Dual wok	NG 4" WC*	1.41	17361 BTU/HR
		1.41	
		0.7	
	LPG 11" WC*	0.8	18527 BTU/HR
		0.8	
		0.5	

*Nominal pressure with at least one large burner on high

All appliances are factory set for either Natural Gas or ULPG and are not convertible.

INSTALLER CHECKLIST

TO BE COMPLETED BY THE INSTALLER

GENERAL

- ☐ Specified clearances have been maintained.
- ☐ Products are level – front to back and side to side.
- ☐ All packaging materials have been removed.
- ☐ There is constant flow of cool air from the cabinetry to the base of the products.
- ☐ Products have all been securely clamped.
- ☐ Communication cables are routed away from cooktop exhausts, secured to cabinetry and are unobstructed by drawers or other objects.
- ☐ Module layout configuration has been checked and confirmed.
- ☐ Touch controls and displays are functioning.

ELECTRICAL

- ☐ Receptacle with correctly rated over-current protection is provided for service cord connection.
- ☐ Adequate ground connection established.
- ☐ Domestic wiring is suitable for total cooktop rating.
- ☐ Power supply cable is accessible and is not touching the products.

GAS

- ☐ Manual gas shut-off valve installed in an accessible location.
- ☐ Unit tested and free of gas leaks.

FISHERPAYKEL.COM

© Fisher & Paykel Appliances 2025. All rights reserved.

The models shown in this guide may not be available in all markets and are subject to change at any time.

The product specifications in this guide apply to the specific products and models described at the date of issue. Under our policy of continuous product improvement, these specifications may change at any time.

For current details about model and specification availability in your country, please go to our website or contact your local Fisher & Paykel dealer.