Under-Cabinet

Choose the BUEZ3, 4-way convertible hood for round and rectangular ducted, as well as non-ducted configurations.

SIZE	WHITE ON WHITE	BLACK	STAINLESS STEEL	GREASE FILTER WITH LIGHT LENS (replacement)	GREASE FILTER WITH LIGHT LENS & NON-DUCT FILTER PAD (replacement)
30-in.	BUEZ330WW	BUEZ330BL	BUEZ330SS	R610045	R610050

HVI PERFORMANCE

Duct Orientation	Size	Damper	Sones		CFM		
			Normal	High	Normal	High 0.25 in. w.g.	High 0.1 in. w.g.
Vertical - Rectangular	3¼-in. x 10-in.	Included	2.0	6.0	100	105	190
Horizontal - Rectangular	3¼-in. x 10-in.	Included	2.0†	7.0	90†	105	160
Vertical - Round	7-in.	BP87Q (purchase separately)	2.0	6.0	130	100	240

FEATURES

Max. Blower Airflow	260 CFM†
Control type	2-speed Rocker
Lighting	1-level Rocker 1- 75W, A19 incandescent bulb (purchase separately)
Fan Blade	Polymeric
Grease Filter with Light Lens	Washable aluminum 11-1/2" x 11-3/4"
Grease Filter withNon-Duct Filter & Light Lens	R610050 - 11-1/2" x 11-3/4" (purchase separately)
Installation Hardware	EZ1 brackets
ADA Compatible	yes

AC INPUT

115V, 60 Hz - 1.8 AMPS

OPTIONAL ACCESSORIES

ADA Wiring Kit	HAWRK3

MOUNTING HEIGHT

18-in. to 24-in. from cooktop to bottom of hood

LIMITED WARRANTY

1-year
See www.broan.com for full warranty text.

FOR INDOOR USE ONLY

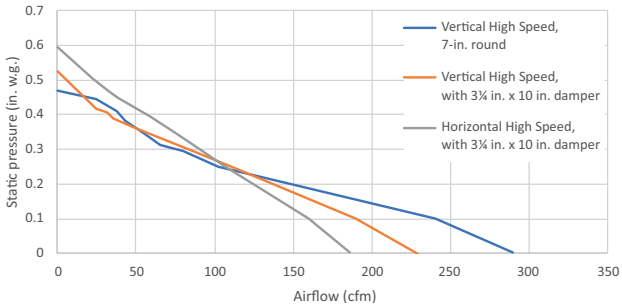

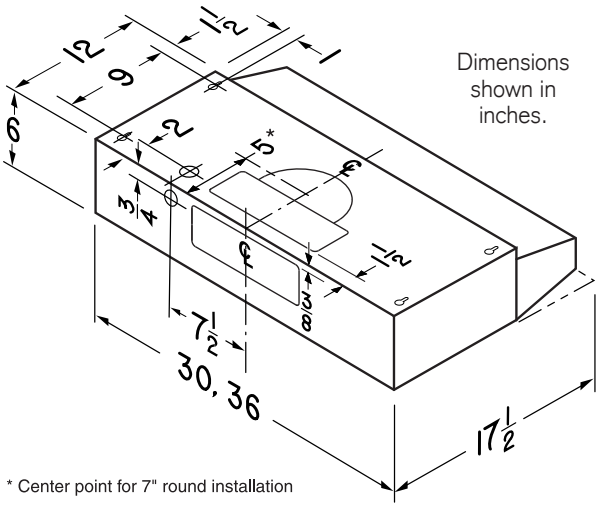

HVI-2100 CERTIFIED RATINGS comply with new testing technologies and procedures prescribed by the Home Ventilating Institute, for off-the-shelf products, as they are available to consumers. Product performance is rated at 0.1 in. static pressure, based on tests conducted in AMCA's state-of-the-art test laboratory. Sones are a measure of humanly-perceived loudness, based on laboratory measurements.

† Where noted performance rating is not HVI certified but was established in accordance with HVI Standardized test procedure.

SPECIFICATION SHEET
BUEZ3 SERIES

Broan-NuTone LLC | 926 West State Street, Hartford, WI 53027 | 1 800-558-1711 | www.Broan-NuTone.com