LG

MFL05761111250 6REV01

43UA73* 43UA77* 75UA75* 86UA71*
50UA73* 50UA77* 75UA77* 86UA75* 86UA80*
55UA73* 55UA77* 75UA84* 86UA77* 86UA84*
65UA73* 65UA77* 75UA85* 86UA79* 86UA85*

www.lg.com
Printed in Korea
Imprimé en Corée

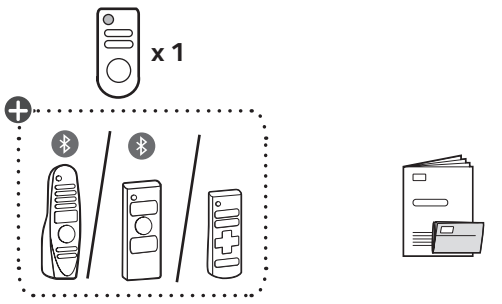

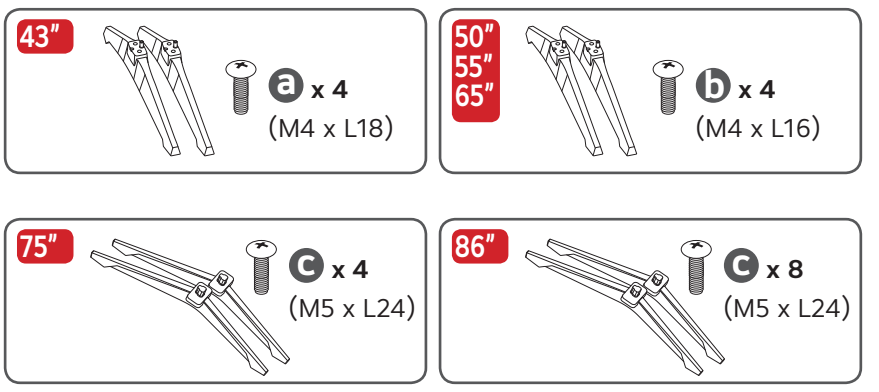

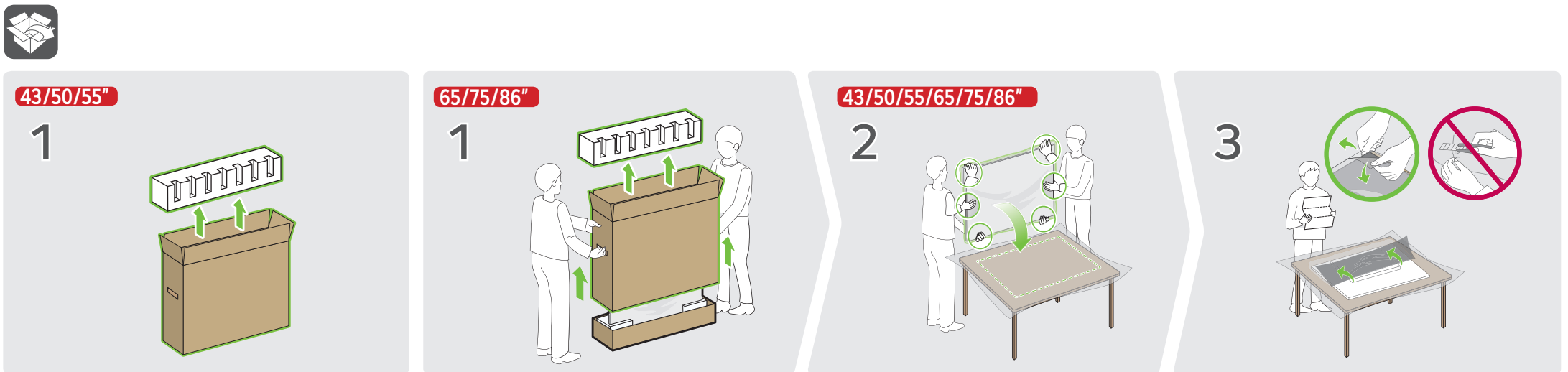

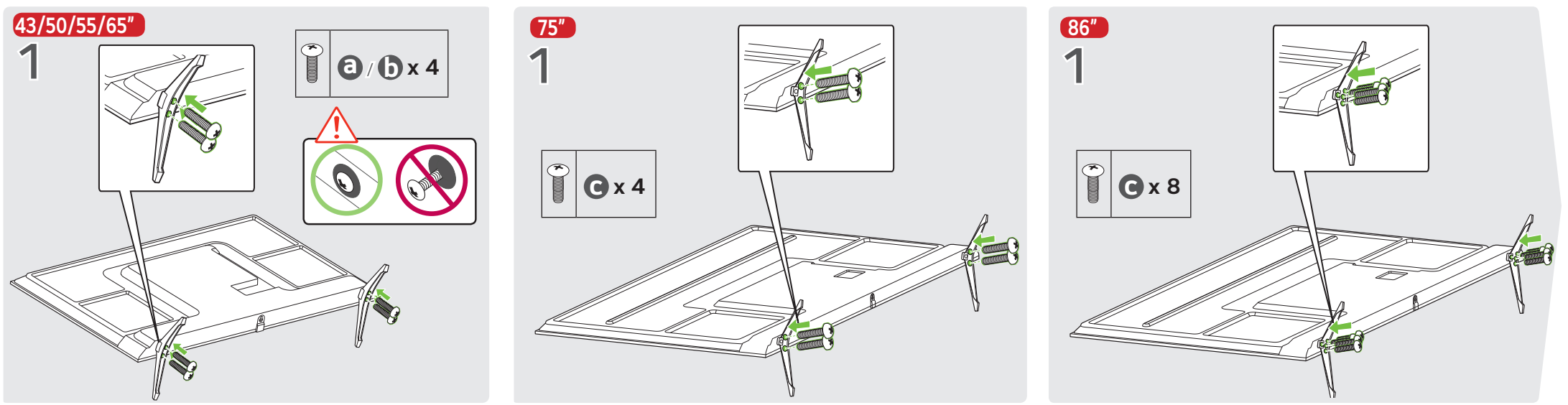

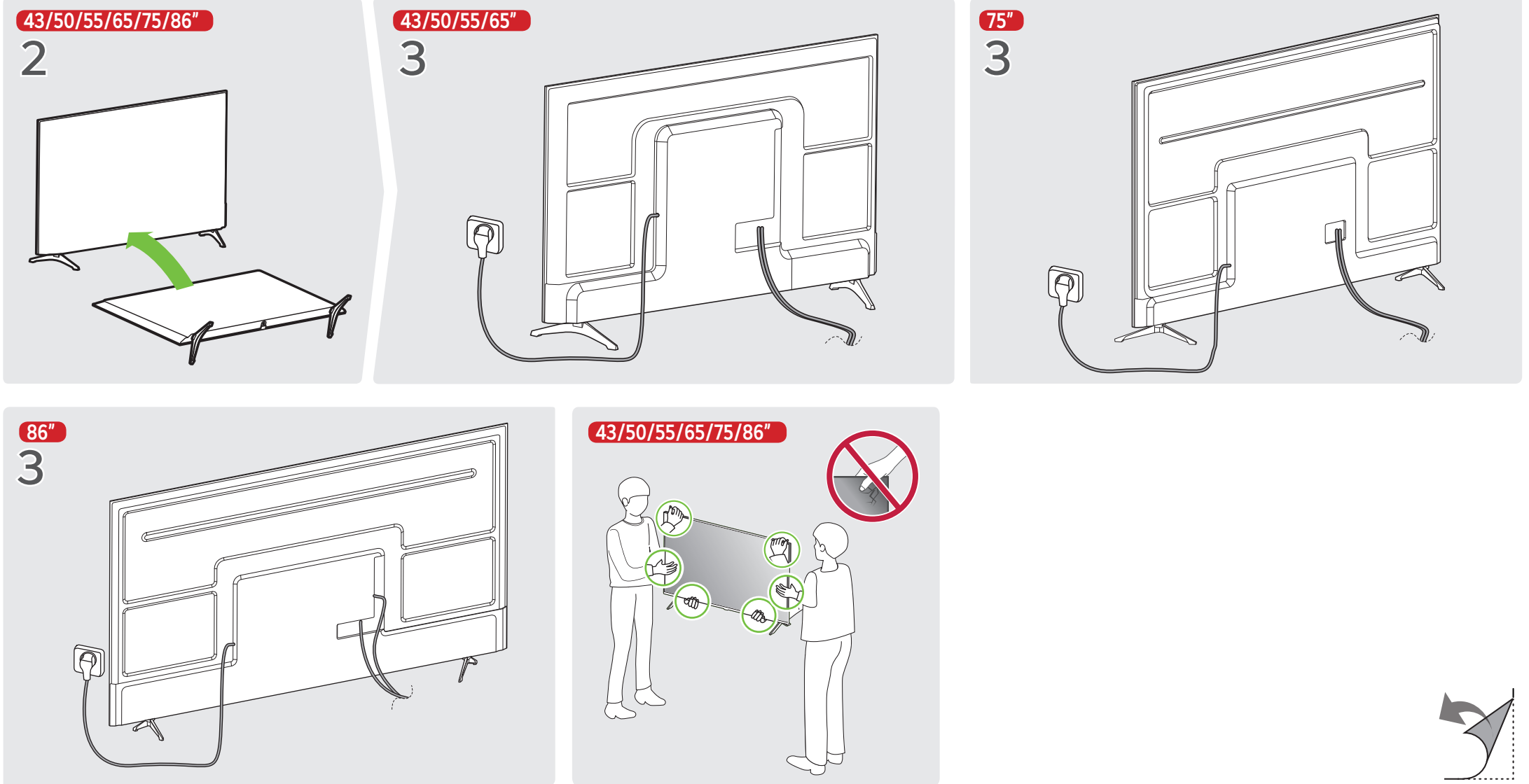

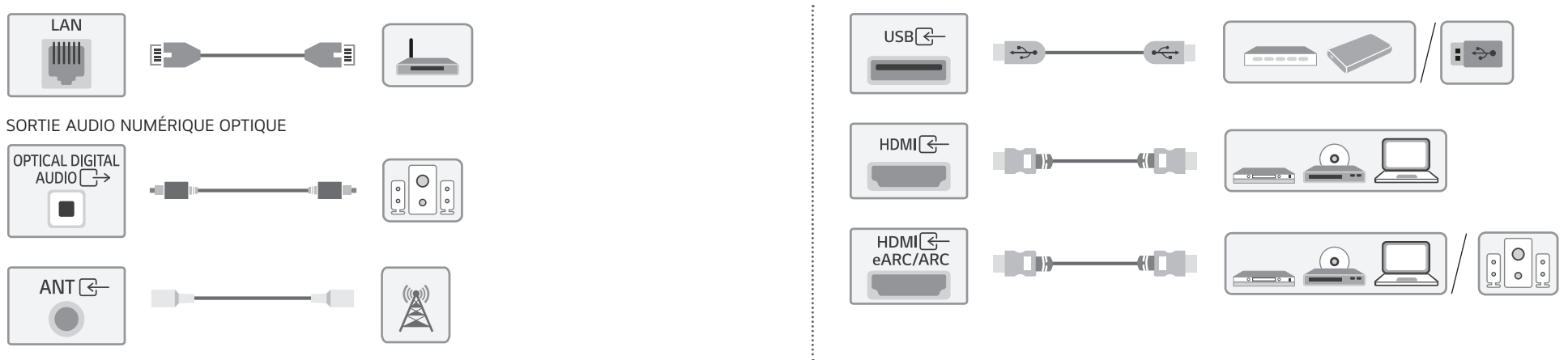

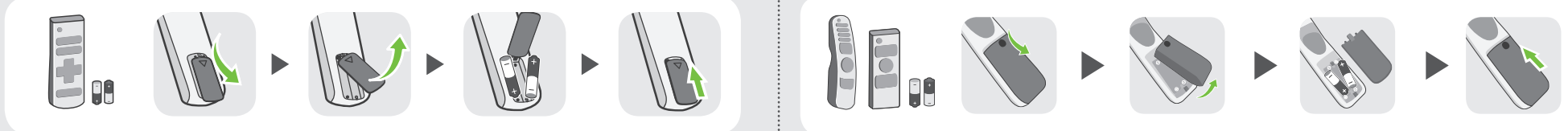

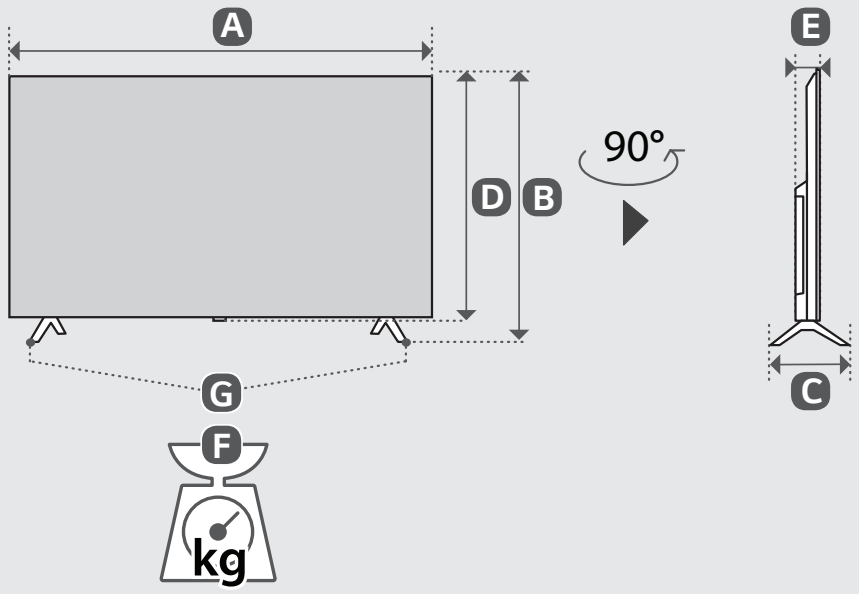

mm (inches / pulgadas / po)
kg (lbs / libras / lb)

	A	B	C	D	E	F	F - G	
43UA73* 43UA77*	957 mm (37.6) inches	607 mm (23.8) inches	237 mm (9.3) inches	559 mm (22.0) inches	58.3 mm (2.2) inches	6.2 kg (13.6) lbs	6.1 kg (13.4) lbs	105 W
50UA73* 50UA77*	1 111 mm (43.7) inches	700 mm (27.5) inches	275 mm (10.8) inches	645 mm (25.3) inches	59.8 mm (2.3) inches	8.5 kg (18.7) lbs	8.3 kg (18.2) lbs	116 W
55UA73* 55UA77*	1 226 mm (48.2) inches	766 mm (30.1) inches	275 mm (10.8) inches	711 mm (27.9) inches	59.8 mm (2.3) inches	10.5 kg (23.1) lbs	10.3 kg (22.7) lbs	136 W
65UA73* 65UA77*	1 446 mm (56.9) inches	894 mm (35.1) inches	309 mm (12.1) inches	834 mm (32.8) inches	59.9 mm (2.3) inches	14.7 kg (32.4) lbs	14.5 kg (31.9) lbs	157 W
75UA75* 75UA77* 75UA84* 75UA85*	1 668 mm (65.6) inches	1 031 mm (40.5) inches	344 mm (13.5) inches	960 mm (37.7) inches	59.8 mm (2.3) inches	24 kg (52.9) lbs	23.5 kg (51.8) lbs	201 W
86UA71* 86UA75* 86UA77* 86UA79* 86UA80* 86UA84* 86UA85*	1 920 mm (75.5) inches	1 182 mm (46.5) inches	413 mm (16.2) inches	1 102 mm (43.3) inches	59.8 mm (2.3) inches	34.2 kg (75.3) lbs	33.6 kg (74.0) lbs	226 W

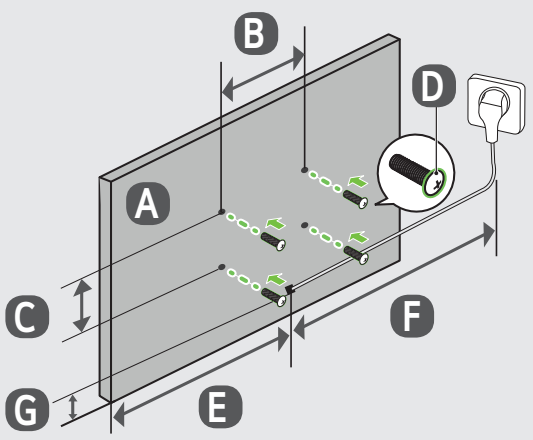

A	B x C	D	E	F	G
43UA73* 43UA77*	200 x 300 mm (7.8 x 11.8) inches	M6	296 mm (11.6) inches	≥1.5 m (59.0) inches	226 mm (8.8) inches
50UA73* 50UA77*			373 mm (14.6) inches		226 mm (8.8) inches
55UA73* 55UA77*			409 mm (16.1) inches		250 mm (9.8) inches
65UA73* 65UA77*			519 mm (20.4) inches		250 mm (9.8) inches
75UA75* 75UA77* 75UA84* 75UA85*	300 x 300 mm (11.8 x 11.8) inches		484 mm (19.0) inches		172 mm (6.7) inches
86UA71* 86UA75* 86UA77* 86UA79* 86UA80* 86UA84* 86UA85*	400 x 400 mm (15.7 x 15.7) inches	M8	595 mm (23.4) inches		294 mm (11.5) inches

* : 0~9, A~Z
mm (inches / pulgadas / po)