www.lg.com

Copyright © 2026 LG Electronics Inc. All Rights Reserved.

ENGLISH

# LG UltraGear™ AI

(OLED Monitor)

# OWNER'S MANUAL

Please read this manual carefully before operating your set and retain it for future reference.

34GX90SB
39GX90SB

The model and serial number of the product are located on the back and on one side of the product. Record them below in case you ever need service.

Model _____

Serial No. _____

Supplier's Declaration of Conformity

| | |
|---|---|
| Trade Name | LG |
| Responsible Party | LG Electronics USA, Inc. |
| Address | 111 Sylvan Avenue, North Building, Englewood Cliffs, NJ 07632 |
| E-mail | lg.environmental@lge.com |

# Before reading this manual

- Read this manual thoroughly before operating your Monitor, and keep it for future reference.
- On the website you can download the manual including installation, using, troubleshooting, specifications, license etc and view its contents on your PC or mobile device.
- For more information about this Monitor, read the USER GUIDE embedded in the product.
  - To open the USER GUIDE ⚙ → [⚙] → [Support] → [User Guide]

### Separate Purchase

- Separate purchase items can be changed or modified for quality improvement without any notification. Contact your dealer to buy these items. These devices only work with certain models.
- Check whether your model supports Bluetooth in the Wireless Module Specification to verify whether it can be used with the Magic Remote.
- A cable to connect external devices must be purchased separately.

**Note**

- Product specifications or contents of this manual may be changed without prior notice due to upgrade of product functions.
- The items supplied with your product may vary depending upon the model.
- The model name or design may be changed depending upon the upgrade of product functions, manufacturer's circumstances or policies.
- Image shown may differ from your Monitor.

# Important Precautions

Please read these safety precautions carefully before using the product. All precautions and safety information applies to OLED models.

⚠

- Failure to follow those warnings may result in death, serious injury or damage to the product or other property.

## Precautions to the AC Adapter and Electrical Power

⚠

- If water or any foreign substance goes inside the product (Monitor, power cord, or AC adapter), disconnect the power cord immediately and contact the service center.
  - Otherwise, this may cause a fire or electric shock due to damage to the product.
- Do not touch the power plug or AC adapter with wet hands. If the pins of the plug are wet or dusty, wipe and dry them before use.
  - Otherwise, this may cause a fire or electric shock.
- Make sure to completely insert the power cord into the AC adapter.
  - If loosely connected, the poor connection may cause a fire or electric shock.
- Be sure to use power cords and AC adapters provided or approved by LG Electronics, Inc.
  - The use of non-approved products may cause a fire or electric shock.
- When unplugging the power cord, always pull it by the plug. Do not bend the power cord with excessive force.
  - The power line can be damaged, which may cause electric shock or fire.
- Be careful not to step or place heavy objects (electronic appliances, clothing, etc.) on the power cord or AC adapter. Be careful not to damage the power cord or AC adapter with sharp objects.
  - Damaged power cords may cause a fire or electric shock.

- Never disassemble, repair or modify the power cord or AC adapter.
  - This may cause a fire or electric shock.
- Use only the power cord supplied with the unit or another manufacturer's authorized cord.
  - Failure to do so may result in fire or electrical shock or damage to the product.
- Use only a properly grounded plug and receptacle.
  - If you do not you may be electrocuted or injured. Or the product might be damaged.
- Do not use a damaged or loose plug.
  - This may cause electrical shock or fire.
- Operate the display only from a power source(i.e. voltage) indicated in the product specification.
  - Otherwise the product can be damaged, fire can occur or you may be electrocuted. If you are not sure what type of power supply you have, consult a certified electrician.
- In the presence of thunder and lightning, never touch the power cord and signal cable because it can be very dangerous.
  - It can cause electric shock.
- Do not connect several extension cords, electrical appliances or electrical heaters to a single outlet. Use a power bar with a grounding terminal designed for exclusive use with the computer.
  - A fire can break out due to overheating.
- Do not touch the power plug with wet hands. Additionally, if the cord pin is wet or covered with dust, dry the power plug completely or wipe dust off before plugging in the cord.
  - You may be electrocuted due to excess moisture.
- If you don't intend to use the product for a long time, unplug the power cable from the product.
  - Covering dust can cause a fire, or insulation deterioration can cause electric leakage, electric shock or fire.
- Insert the power plug firm so it cannot come loose.
  - A loose connection can cause fire.
- Do not insert metal or other conductive materials into the product openings. Additionally, do not touch the power cable right after plugging into the wall input terminal.
  - You may be electrocuted.
- The AC Plug is the disconnecting device. It should be easily accessible in case of emergency.
- Please make sure the device is installed near the wall outlet to which it is connected and that the outlet is easily accessible.
- Be sure to keep the outlet, AC adapter, and pins of the power plug clean from dust and etc.
  - This may cause a fire.
- Do not unplug the power cord while the product is in use.
  - Electrical shock can damage the product.
- As long as this unit is connected to the AC wall outlet, it is not disconnected from the AC power source even if the unit is turned off.

## Precautions in installing the Product

⚠

- Keep away from heat sources like heaters or open flames.
  - Electrical shock, fire, malfunction or deformation may occur.
- Keep the packing anti-moisture material or vinyl packing out of the reach of children.
  - Anti-moisture material is harmful if swallowed. If swallowed by mistake, force the patient to vomit and visit the nearest hospital. Additionally, vinyl packing can cause suffocation. Keep it out of the reach of children.
- Do not put heavy objects on the product on sit upon it.
  - If the product collapses or is dropped, you may be injured. Children must pay particular attention.
- Do not leave the power or signal cable where someone can trip over it.
  - The passerby can falter, which can cause electrical shock, fire, product breakdown or injury.
- Install the product in a neat and dry place. Do not use near water.
  - Dust or moisture can cause electrical shock, fire or product damage.
- Do not add accessories that have not been designed for this display.

- If you smell smoke or other odors or hear a strange sound from the product unplug the power cord and contact LG Customer Service.
  - If you continue to use without taking proper measures, electrical shock or fire can occur.
- If you dropped the product or the case is broken, turn off the product and unplug the power cord.
  - If you continue to use without taking proper measures, electrical shock or fire can occur. Contact LG Customer Service.
- Do not drop an object on or apply impact to the product. Do not throw any toys or objects at the product.
  - It can cause injury to humans, problems to the product and damage the display.
- Keep out of reach of children and do not place toys near the product.
- Make sure the product ventilation hole is not blocked. Install the product more than 10cm (3.9 inches) from the wall.
  - If you install the product too close to the wall, it may be deformed or fire can break out due to internal heat build-up.
- Do not cover the product with cloth or other material (eg. plastic) while plugged in.
  - The product can be deformed or fire can break out due to internal overheating.
- Place the product on a flat and stable surface that is large enough to support the product.
  - If the product is dropped, you may be injured or the product may be broken.
- Install the product where no Electromagnetic Interference occurs.
- Keep the product away from direct sunlight.
  - The product can be damaged.
- Do not place the product on the floor.
  - Small Children and others may trip over it.
- Do not install this product on a wall if it could be exposed to oil or oil mist.
  - This may damage the product and cause it to fall.
- For displays with glossy bezels the user should consider the placement of the display as the bezel may cause disturbing reflections from surrounding light and bright surfaces.

## Precautions in Moving the Product

⚠

- Make sure to turn off the product.
  - You may be electrocuted or the product can be damaged.
- Make sure to remove all cables before moving the product.
  - You may be electrocuted or the product can be damaged.
- When lifting or moving the product, do not hold it upside down while holding only the stand.
  - This may cause the product to fall resulting in damage or injury.
- Do not shock the product when moving it.
  - You may be electrocuted or the product can be damaged.
- Make sure the panel faces forward and hold it with both hands to move.
  - If you drop the product, the damaged product can cause electric shock or fire.
- Do not place the product face down.
  - This may damage the OLED screen.

# Precautions in Using/Cleaning the Product

⚠

- Do not attempt to disassemble, repair or modify the product yourself.
  - Fire or electric shock can occur.
  - Contact LG Customer Service for repair.
- When cleaning the product, unplug the power cord and scrub gently with a soft cloth to prevent scratching. Do not clean with a wet cloth or spray water or other liquids directly onto the product. An electric shock may occur. (Do not use chemicals such as benzene, paint thinners or alcohol)
- Keep the product away from water.
  - Fire or electric shock accident can occur.
- Avoid high temperatures and humidity.
- Do not put or store flammable substances near the product.
  - There is a danger of explosion or fire.
- Keep the product clean at all times.
- Take a comfortable and natural position when working with the product.
- Take a regular break when working with the product for a long time.
- Do not press on the panel with a hand or sharp object such as nail, pencil or pen, or make a scratch on it.
- Keep proper distance from the product and rest from time-to-time.
  - Your vision may be impaired if you look at the product too closely or for too long.
- Set the appropriate resolution by referring to the User's Guide.
- Keep small accessories out of the reach of children.
- Displaying a still image for long time on the monitor may leave persistent image or stain on the monitor screen. To avoid this problem, use a screen saver and power off when this product is not used. Persistent image or stain caused by long time usage are not covered by the warranty on this product.
- Do not use products using high voltage around the Monitor. (ex. Electrical Swatter)
  - Monitor may have malfunction as its electrical shock.
- Spray water onto a soft cloth 2 to 4 times, and use it to clean the front frame, wipe in one direction only. Too much moisture may cause staining.

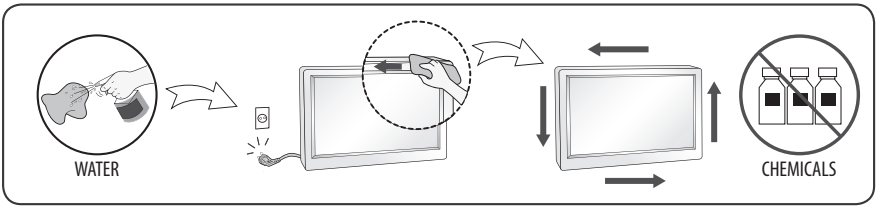

# Installation

## Lifting and moving the Monitor

Please note the following advice to prevent the Monitor from being scratched or damaged and for safe transportation regardless of its type and size.

- It is recommended to move the Monitor in the box or packing material that the Monitor originally came in.
- Before moving or lifting the Monitor, disconnect the power cord and all cables.
- When holding the Monitor, the screen should face away from you to avoid damage.
- Hold the side and bottom of the Monitor frame firmly. Make sure not to hold the transparent part, speaker, or speaker grill area.
- When transporting a large Monitor, there should be at least 2 people.
- When transporting the Monitor, do not expose the Monitor to jolts or excessive vibration.
- When transporting the Monitor, keep the Monitor upright, never turn the Monitor on its side or tilt towards the left or right.
- Do not apply excessive pressure to cause flexing / bending of frame chassis as it may damage screen.

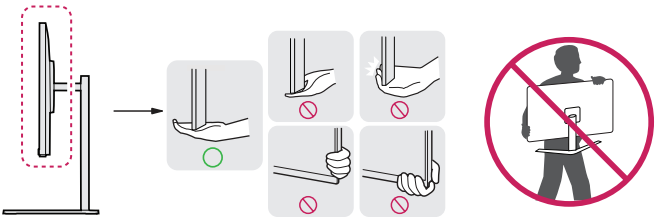

⚠

- When handling the Monitor, be careful not to damage the protruding buttons.
- Avoid touching the screen at all times, as this may result in damage to the screen.
- When attaching the stand to the Monitor set, place the screen facing down on a cushioned table or flat surface to protect the screen from scratches.

## Installing on a Table

- Lift the monitor and place it on the table in an upright position. Place the monitor at least 100 mm (3.9 inches) away from the wall to ensure sufficient ventilation.

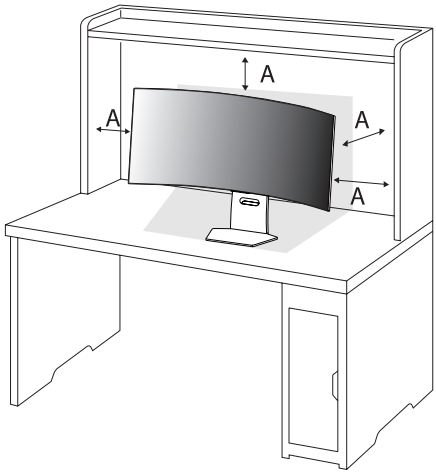


A: 100 mm (3.9 inches)

⚠

- Unplug the power cord before moving or installing the monitor. There is risk of electric shock.
- Make sure to use the power cord that is provided in the product package and connect it to a grounded power outlet.
- If you need another power cord, please contact your local dealer or the nearest retail store.

## Adjusting the Angle

1 Place the monitor mounted on the stand base in an upright position.

2 Adjust the angle of the screen.

The angle of the screen can be adjusted forward or backward from -8° to 15° for a comfortable viewing experience. And you can also adjust the angle of the screen by 30 degrees to the left or to the right.

⚠

- To avoid injury to the fingers when adjusting the screen, do not hold the lower part of the monitor's frame as illustrated below.
- Be careful not to touch or press the screen area when adjusting the angle of the monitor.

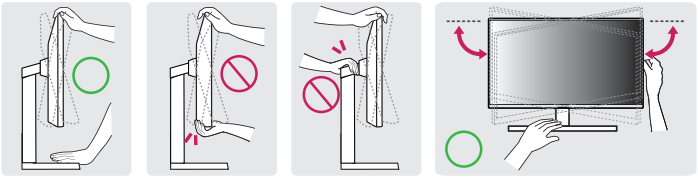

## Adjusting the Stand Height

1 Make sure to hold and move the monitor with both hands.

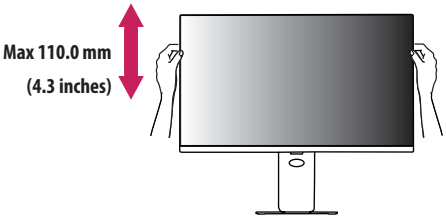


⚠

- To avoid injury when adjusting the height, do not put your hands on the stand.

## Using the Kensington Lock

For more information on installation and usage, refer to the Kensington lock owner's manual or visit the website at *http://www.kensington.com*.
Connect the monitor to a table using the Kensington security system cable.

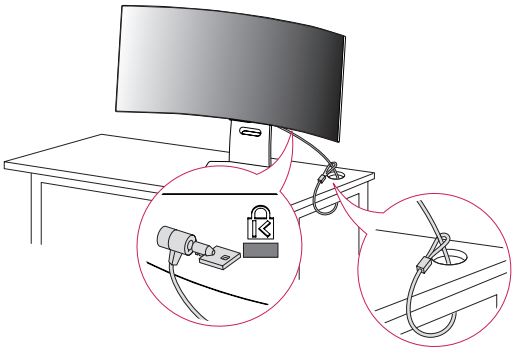

**Note**

- The Kensington security system is optional. You can obtain optional accessories from most electronics stores.

## Installing on the Wall

This monitor meets the specifications for the wall mount plate or other compatible devices.

- Install the monitor at least 100 mm (3.9 inches) away from the wall and leave about 100 mm (3.9 inches) of space at each side of the monitor to ensure sufficient ventilation. Detailed installation instructions can be obtained from your local retail store. Alternatively, please refer to the manual for how to install and set up a tilting wall mounting bracket.

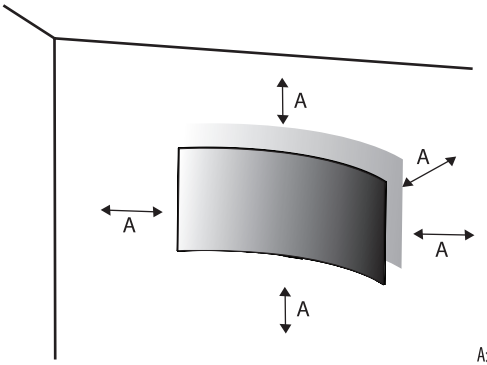


A: 100 mm (3.9 inches)

**Installing the Wall Mount Plate**

To install the monitor to a wall, attach a wall mounting bracket (optional) to the back of the monitor.
Make sure that the wall mounting bracket is securely fixed to the monitor and to the wall.

| | |
|---|---|
| **Wall Mount (mm)** | 100 x 100 (3.9 x 3.9 inches) |
| **Standard screw** | M4 x L10 |
| **Number of screws** | 4 |
| **Wall Mount Plate (Optional)** | LSW149 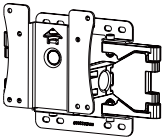 |

**Note**

- Use the screws specified by VESA standards.
- The wall mount kit includes the installation guide and all necessary parts.
- The wall mounting bracket is optional. You can obtain optional accessories from your local dealer.
- The length of the screw may differ for each wall mounting bracket. If you use screws longer than the standard length, it may damage the inside of the product.
- For more information, please refer to the user manual for the wall mounting bracket.
- Be careful not to apply too much force while mounting the wall mount plate as it may cause damage to the screen.
- Remove the stand before installing the monitor on a wall mount by performing the stand attachment in reverse.

⚠

- Unplug the power cord before moving or installing the monitor to avoid electric shock.
- Installing the monitor on the ceiling or on a slanted wall may result in the monitor falling off, which could lead to injury. Use an authorized LG wall mount and contact the local dealer or qualified personnel.
- To prevent injury, this apparatus must be securely attached to the wall in accordance with the installation instructions.
- Applying excessive force when tightening screws may cause damage to the monitor. Damage caused in this way will not be covered by the product warranty.
- Use the wall mounting bracket and screws that conform to VESA standards. Damage caused by the use or misuse of inappropriate components will not be covered by the product warranty.
- When measured from the back of the monitor, the length of each installed screw must be 8 mm (0.3 inches) or less.

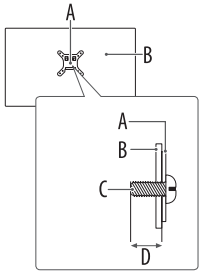


A: Wall Mount Plate

B: Back of the Monitor

C: Standard screw

D: Max. 8 mm (0.3 inches)

# Connections

You can connect various external devices to your monitor. Change the input mode and select the external device you want to connect. For more information about external device connections, see the user manual provided with each device.

## Connecting to a Port

Some of the cables are not provided. This monitor supports the Plug and Play* feature.

* Plug and Play: a feature that enables a PC to recognize devices attached by the user without device configuration or user intervention when powering up.

⚠

- If you turn the monitor on when the set is cold, the screen may flicker. This is normal.
- Do not press the screen with your finger for a prolonged period as this may result in temporary distortion on the screen.
- Avoid displaying static images on the screen for a long period of time to prevent retention. Use a screensaver if possible.
- A wireless communication device near your monitor can affect the image.
- For an optimal connection, HDMI cables and USB devices should have bezels less than 10 mm (0.39 inches) thick and 18 mm (0.7 inches) width. Use an extension cable that supports USB 2.0 if the USB cable or USB memory stick does not fit into your Monitor's USB port. (Depending upon model)

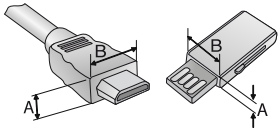


* A ≦ 10 mm (0.39 inches)

* B ≦ 18 mm (0.7 inches)

## HDMI connection

Transmits digital video and audio signals from your PC to the monitor.

- When connecting the HDMI cable, the product and external devices should be turned off and unplugged.
- Supported HDMI Audio format:

  Dolby Digital / Dolby Digital Plus (32 kHz / 44.1 kHz / 48 kHz), PCM (32 kHz / 44.1 kHz / 48 kHz / 96 kHz / 192 kHz)
- Recommended HDMI Cable Types (shorter than 3 m (9.84 feet))
  - Ultra High Speed HDMI®/™ Cable
  - Ultra High Speed HDMI®/™ Cable with Ethernet
- Use a certified cable with the HDMI logo attached. If you do not use a certified HDMI cable, the screen may not display or a connection error may occur.
- If you cannot hear any sound in HDMI mode please check your PC settings. Some PCs require you to manually change the default audio output to HDMI.
- When connecting a PC via HDMI, check the input for PC.
- It can be caused compatibility issues with some PCs.

**Note**

- If the device connected to Input Port also supports HDMI Deep Color, your picture may be clearer. However, if the device doesn't support it, it may not work properly. In that case, change the Monitor's [HDMI Deep Color] setting to off.
  - ⚙ → [⚙] → [General] → [External Devices] → [HDMI Settings] → [HDMI Deep Color]

## DisplayPort connection

Transmits digital video and audio signals from your PC to the monitor.

**Note**

- There may be no video or audio output depending on the DP (DisplayPort) version of the PC.
- If you are using a Mini DisplayPort output graphics card, use a Mini DP to DP (Mini DisplayPort to DisplayPort) cable or gender that supports DisplayPort1.4. (Sold separately)

## USB-C (UPSTREAM) connection

Transmits digital video and audio signals from your PC to the monitor.

**Note**

- USB-C does not support fast charging. Gender converters for fast charging is also not supported.
- PD(Power Delivery) and DP Alternate Mode(DP over USB-C) are supported via USB-C (UPSTREAM) Port.
- Features may not work properly depending upon the connected device's specifications and the environment.
- USB-C port is not for the monitor power source but for a PC power source. Connect adapter to supply power to the monitor.

## USB (USB-IN) Device connection

You can use USB Devices connected to the device's USB In Port on PC and webOS. (*Some USB devices may have restrictions of use on webOS.)

To use the switching hub function, press and hold the OSD Up button, or press the Settings button on the remote control, and select [⚙] > [System] > [External Device] > [Switching Hub] on the menu.

* USB storage devices may not switch depending on the model. After removing USB storage device, it is recommended to use Switching Hub.

**Note**

- It is recommended you install all Windows Updates to keep your Windows up-to-date before connecting to the product for use.
- Peripheral devices are sold separately.
- A keyboard, mouse, or USB device can be connected to the USB port.
- USB-IN port (the Downstream port) supports USB 2.0 device.

⚠

- Cautions when using a USB device.
  - A USB device with an automatic recognition program installed, or that uses its own driver, may not be recognized.
  - Some USB devices may not be supported or may not work properly.
  - It is recommended to use a USB hub or hard disk drive with power supplied. (If the power supply is not adequate, the USB device may not be recognized properly.)
  - Some USB Hubs may not work. If a USB device connected using a USB Hub is not detected, connect it to the USB port on the Monitor directly.
  - Connecting a USB-C Dockingstation or USB-C Hub to a smart monitor may not work.

## Headphones connection

Connect peripherals to the monitor via the headphones port.

**Note**

- Peripheral devices are sold separately.
- Depending on the audio settings of the PC and external device, headphones and speaker functions may be limited.
- If you use angled earphones, it may cause a problem with connecting another external device to the monitor. Therefore, it is recommended to use straight earphones.



Angled



Straight
(Recommend)

## Parts and Buttons

The image may be different according to the model.

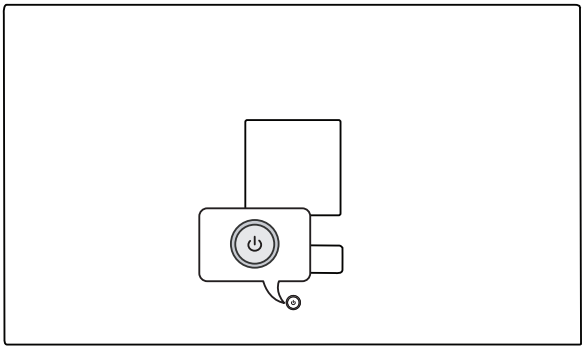

Power On (Press)
Quick Menu (Press [1])
Menu Selection (Press [2])
Power Off [3] (Press and Hold)

Volume Control
Menu Control [2]

Menu Control [2]

1 When the monitor is turned on, press the ⏻ button one time.
2 You can use the function when you control menu.
3 Power off the monitor.

### Quick Menu

| | |
|---|---|
| ⏻ | Turns the power off. |
| ⇄ | Changes the input source. |
| ⚙ | Accesses the main menu. |
| ✕ | Close the quick menu. |

## Replacing the Remote Control Battery

Use 3 V, CR2025 button cell battery. Replace the battery with new one and insert it in the battery tray as shown.

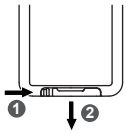


1 To separate the battery tray on the back of the remote control, push the hook to the side and then pull it.
2 Align the ⊕ side of the replacement battery to the battery tray label and insert them correctly.
3 Push the battery tray in until it clicks.

The illustrations may differ from the actual accessories.

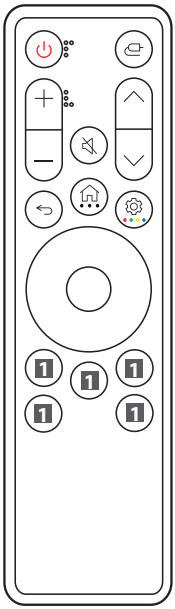

**Power** Turns the Monitor on or off.
**Input** Selects the input mode.
**+/— Volume buttons** Adjusts the volume level.
**Mute** Mutes all sounds.
**∧/∨ Channels buttons** Scrolls through the saved channels.
**Back** Returns to the previous level.
**Home** Displays the Home menu, such as the current time, weather, app list, and external input.
**• • • More Actions** If you press and hold the button, it allows you to view details of item.
**Settings** Makes the main menu screen appear or disappear.
**• • • • Color key** If you press and hold the button, it allows you to use the 4 color buttons.
**Direction buttons and OK** It allows you to move, select, and adjust menus.
**1 Streaming Service buttons** Connects to the Video Streaming Service.
**1 Home Dashboard** Accesses the [Home Dashboard].
**1 User Guide** Accesses the [User Guide].
**1 ▷,||** Control buttons for media contents.

(Some buttons and services may not be provided depending upon models or regions.)

**Note**

- Be sure to point the remote control toward the remote control sensor on the monitor.
- The product's internal and external batteries should not be exposed to excessive heat such as direct sunlight, fire, or the like.
- Risk of fire or explosion if the battery is replaced by an incorrect type.

# Product Information

| Environment Condition | |
|---|---|
| Operating Temperature | 0 °C to 40 °C (32 °F to 104 °F) |
| Operating Humidity | Less than 80 % |
| Storage Temperature | -20 °C to 60 °C (-4 °F to 140 °F) |
| Storage Humidity | Less than 85 % |

| Wireless module (LGSBWAC23) Specifications | |
|---|---|
| Wireless LAN (IEEE 802.11a/b/g/n/ac) | |
| Frequency range | Output Power (Max.) |
| 2,400 to 2,483.5 MHz | 17 dBm |
| 5,150 to 5,725 MHz | 16 dBm |
| 5,725 to 5,850 MHz | 16 dBm |
| Bluetooth | |
| Frequency range | Output Power (Max.) |
| 2,400 to 2,483.5 MHz | 8 dBm |

As band channels can vary per country, the user cannot change or adjust the operating frequency. This product is configured for the regional frequency table.

For consideration of the user, this device should be installed and operated with a minimum distance of 20 cm (7.8 inches) between the device and the body.

FCC ID: BEJLGSBWAC23 / IC: 2703H-LGSBWAC23

This product contains a Type Approved Module by Jamaica: SMA - LGSBWAC23

Specifications are subject to change without notice.
The symbol ~ means alternating current, and the symbol ⎓ means direct current.

**34GX90SB**

**Dimensions**: Monitor Size (Width x Depth x Height)

- With Stand: 784.1 mm x 291.8 mm x 580.4 mm (30.8 inches x 11.4 inches x 22.8 inches)
- Without Stand: 784.1 mm x 167.1 mm x 358.3 mm (30.8 inches x 6.5 inches x 14.1 inches)

**Weight (Without Packaging)**

- With Stand: 10.40 kg (22.9 lbs)
- Without Stand: 6.20 kg (13.6 lbs)

**39GX90SB**

**Dimensions**: Monitor Size (Width x Depth x Height)

- With Stand: 887.8 mm x 322.8 mm x 605.7 mm (34.9 inches x 12.7 inches x 23.8 inches)
- Without Stand: 887.8 mm x 198.0 mm x 404.4 mm (34.9 inches x 7.7 inches x 15.9 inches)

**Weight (Without Packaging)**

- With Stand: 11.45 kg (25.2 lbs)
- Without Stand: 7.30 kg (16.0 lbs)

**34GX90SB**

**Power Sources**

- Power Rating: 20 V ⎓ 11.5 A

**39GX90SB**

**Power Sources**

- Power Rating: 20 V ⎓ 13.5 A

**AC/DC Adaptor**

- Model: AD10660LF
  Manufacturer: PI ELECTRONICS (H.K.) Ltd.
- Model: ADS-270RLD-20-1 200270E
  Manufacturer: SHENZHEN HONOR ELECTRONIC
  - Input: 100-240 V~ 50/60 Hz 3.3 A
  - Output: 20 V ⎓ 13.5 A

**Power Delivery**

- 65 W

# Support Mode

## (Preset Mode, HDMI)

| Resolution | Horizontal Frequency (kHz) | Vertical Frequency (Hz) | Polarity (H/V) | Remarks |
|---|---|---|---|---|
| 640 x 480 | 31.469 | 59.940 | -/- | |
| 800 x 600 | 37.879 | 60.317 | +/+ | |
| 1024 x 768 | 48.363 | 60.004 | -/- | |
| 1280 x 720 | 45.000 | 60.000 | +/+ | |
| 1280 x 1024 | 79.976 | 75.025 | +/+ | |
| 1920 x 1080 | 67.500 | 60.000 | +/+ | |
| 3440 x 1440 | 73.681 | 49.987 | +/- | Recommended Timing<br>- Input Compatibility Version : 1.4 |
| 3440 x 1440 | 88.892 | 60.021 | +/- | |
| 3440 x 1440 | 127.361 | 84.964 | +/- | Recommended Timing<br>- Input Compatibility Version : 2.1 (AV) |
| 2560 x 1440 | 182.996 | 119.998 | +/- | |
| 3440 x 1440 | 183.064 | 120.042 | +/- | |
| 3440 x 1440 | 222.269 | 144.050 | +/- | |
| 3440 x 1440 | 371.944 | 239.964 | +/- | Recommended Timing<br>- Input Compatibility Version : 2.1 (PC) |

## (Preset Mode, DisplayPort/USB-C)

| Resolution | Horizontal Frequency (kHz) | Vertical Frequency (Hz) | Polarity (H/V) | Remarks |
|---|---|---|---|---|
| 640 x 480 | 31.469 | 59.940 | -/- | |
| 800 x 600 | 37.879 | 60.317 | +/+ | |
| 1024 x 768 | 48.363 | 60.004 | -/- | |
| 1280 x 720 | 45.000 | 60.000 | +/+ | |
| 1280 x 1024 | 79.976 | 75.025 | +/+ | |
| 1920 x 1080 | 67.500 | 60.000 | +/+ | |
| 1920 x 1080 | 66.587 | 59.934 | +/- | |
| 3440 x 1440 | 73.681 | 49.987 | +/- | |
| 1920 x 1080 | 137.327 | 120.041 | +/- | |
| 3440 x 1440 | 88.819 | 59.973 | +/- | |
| 3440 x 1440 | 150.972 | 99.982 | +/- | |
| 2560 x 1440 | 222.151 | 143.973 | +/- | |
| 3440 x 1440 | 183.064 | 120.042 | +/- | |
| 3440 x 1440 | 222.269 | 144.050 | +/- | Recommended Timing<br>- Input Compatibility Version : 1.4 |
| 3440 x 1440 | 388.697 | 240.085 | +/- | Recommended Timing<br>- Input Compatibility Version : 1.4(DSC) |

- If the input timing is used outside of the supported frequency, response speed or image quality may deteriorate.
- To display the preferred timing & frequency, make sure to use the graphics card that supports DSC (Display Stream Compression).

## HDMI Timing (Video)

| Factory support mode (Preset Mode) | Horizontal Frequency (kHz) | Vertical Frequency (Hz) |
|---|---|---|
| 480P | 31.5 | 60 |
| 720P | 45.0 | 60 |
| 1080P | 67.5 | 60 |
| 1080P | 135.0 | 120 |
| 2160P | 135.0 | 60 |

## Open Source Software Notice Information

To obtain the source code that is contained in this product, under GPL, LGPL, MPL, and other open source licenses that have the obligation to disclose source code, and to access all referred license terms, copyright notices and other relevant documents, please visit *https://opensource.lge.com*.

LG Electronics will also provide open source code to you on CD-ROM for a charge covering the cost of performing such distribution (such as the cost of media, shipping, and handling) upon email request to *opensource@lge.com*.

This offer is valid to anyone in receipt of this information for a period of three years after our last shipment of this product.

## Licenses

Each model has different licenses. Visit *www.lg.com* for more information on the license.

HIGH-DEFINITION MULTIMEDIA INTERFACE

VESA, VESA logo, DisplayPort compliance logo and DisplayPort compliance logo for dual-mode source devices are all registered trademarks of the Video Electronics Standards Association.

Manufactured under license from Dolby Laboratories. Dolby, Dolby Vision, Dolby Vision IQ, Dolby Audio, Dolby Atmos, and the double-D symbol are trademarks of Dolby Laboratories Licensing Corporation.

Covered by patents at patentlist.accessadvance.com

The Bluetooth® word mark and logos are registered trademarks owned by Bluetooth SIG, Inc. and any use of such marks by LG Electronics Inc. is under license. Other trademarks and trade names are those of their respective owners.

USB Type-C® and USB-C® are registered trademarks of USB Implementers Forum. USB 2.0 Type-C™ is a trademark of USB Implementers Forum.

# Troubleshooting

**Nothing is displayed on the screen.**

- Is the monitor's power cord plugged in?
  - Check if the power cord is correctly plugged into the power outlet.
- Is the [No Signal] message being displayed?
  - This is displayed when the signal cable between the PC and the monitor is missing or disconnected. Check the cable and reconnect it.

**Screen display is unstable and shaky. / Images displayed on the monitor leave shadow trails.**

- Did you select the appropriate resolution?
  - If the selected resolution is HDMI 1080i 60/50 Hz (interlaced), the screen may be flickering. Change the resolution to 1080p or the recommended resolution.
  - Not setting the graphics card to the recommended (optimal) resolution may result in blurred text, a dimmed screen, a truncated display area or misalignment of the display.
  - The setting methods may be different depending upon the computer or operating system, and some resolutions may not be available depending upon the performance of the graphics card. If this is the case, contact the manufacturer of the computer or graphics card for assistance.

**The screen retains an image.**

- Does image sticking occur even when the monitor is turned off?
  - Displaying a still image for a prolonged time may cause damage to the screen, resulting in the retention of the image.
  - To extend the lifetime of the monitor, use a screensaver.
- Are there spots on the screen?
  - When using the monitor, pixilated spots (red, green, blue, white, or black) may appear on the screen. This is normal for an OLED screen. It is not an error, nor is it related to the monitor's performance.

**Do you see an "Unrecognized monitor, Plug and Play (VESA DDC) monitor found" message?**

- Make sure to check if the graphics card supports Plug and Play function.

**Cannot control the Monitor with the remote control.**

- Check if there is any obstacle between the product and the remote control.
- Check if the batteries are still working and properly installed (⊕ to ⊕, ⊖ to ⊖).
- Replace the batteries with new ones.

**The Monitor turns off suddenly.**

- To disable this function, use your remote control to go to ⚙ → [⚙] → [General] → [System] → [Time & Timer] → [Timers] → [Sleep Timer] → [Off].
- Check if external devices are working together.
- Check if the auto-off function is activated on the settings related time. If there is no signal while the Monitor is on, the Monitor will turn off automatically after 15 minutes of inactivity.

**4K resolution is unavailable.**

- Did you check the cable connection?
  - Check if the cable is properly connected.
  - It is recommended to use the accessories supplied with the product.
- Is the resolution and refresh rate set properly?
  - Set the proper resolution and refresh rate in the PC screen resolution settings or the player's option menu.
- Does the connected external device support 4K resolution?
  - It is available only on external devices that support 4K resolution.
  - Check if the connected external device supports 4K resolution.
- Is the [HDMI Deep Color] function enabled?
  - Go to ⚙ → [⚙] → [General] → [External Devices] → [HDMI Settings] → [HDMI Deep Color] function to enable the function.

# LIMITED WARRANTY (USA)

THE PRODUCT'S FULL LIMITED WARRANTY TERMS AND CONDITIONS ARE AVAILABLE AT *https://www.lg.com/us* AND/OR YOUR WARRANTY.

**ARBITRATION NOTICE**: THIS LIMITED WARRANTY CONTAINS AN ARBITRATION PROVISION THAT REQUIRES YOU AND LG ELECTRONICS ("LG") TO RESOLVE DISPUTES BY BINDING ARBITRATION INSTEAD OF IN COURT, UNLESS YOU CHOOSE TO OPT OUT. IN ARBITRATION, CLASS ACTIONS AND JURY TRIALS ARE NOT PERMITTED. PLEASE SEE THE SECTION TITLED "PROCEDURE FOR RESOLVING DISPUTES" BELOW.

**PROCEDURE FOR RESOLVING DISPUTES:**

ALL DISPUTES BETWEEN YOU AND LG ARISING OUT OF OR RELATING IN ANY WAY TO THIS LIMITED WARRANTY OR THE PRODUCT SHALL BE RESOLVED EXCLUSIVELY THROUGH BINDING ARBITRATION, AND NOT IN A COURT OF GENERAL JURISDICTION. BINDING ARBITRATION MEANS THAT YOU AND LG ARE EACH WAIVING THE RIGHT TO A JURY TRIAL AND TO BRING OR PARTICIPATE IN A CLASS ACTION.

**Definitions.** For the purposes of this section, references to "LG" mean LG Electronics U.S.A., Inc., its parents, subsidiaries and affiliates, and each of their officers, directors, employees, agents, beneficiaries, predecessors in interest, successors, assigns and suppliers; references to "dispute" or "claim" shall include any dispute, claim or controversy of any kind whatsoever (whether based in contract, tort, statute, regulation, ordinance, fraud, misrepresentation or any other legal or equitable theory) arising out of or relating in any way to the sale, condition or performance of the product or this Limited Warranty.

**Notice of Dispute.** In the event you intend to commence an arbitration proceeding, you must first notify LG in writing at least 30 days in advance of initiating the arbitration by sending a letter to LG at LG Electronics, USA, Inc. Attn: Legal Department- Arbitration 111 Sylvan Avenue, Englewood Cliffs, NJ 07632. You and LG agree to engage in good faith discussions in an attempt to amicably resolve your claim. The notice must provide your name, address, and telephone number; identify the product that is the subject of the claim; and describe the nature of the claim and the relief being sought. If you and LG are unable to resolve the dispute within 30 days, either party may proceed to file a claim for arbitration.

**Agreement to Binding Arbitration and Class Action Waiver.** Upon failure to resolve the dispute during the 30 day period after sending written notice to LG, you and LG agree to resolve any claims between us only by binding arbitration on an individual basis, unless you opt out as provided below. Any dispute between you and LG shall not be combined or consolidated with a dispute involving any other person's or entity's product or claim. More specifically, without limitation of the foregoing, any dispute between you and LG shall not under any circumstances proceed as part of a class or representative action. Instead of arbitration, either party may bring an individual action in small claims court, but that small claims court action may not be brought on a class or representative basis.

**Arbitration Rules and Procedures.** To begin arbitration of a claim, either you or LG must make a written demand for arbitration. The arbitration will be administered by the American Arbitration Association ("AAA") and will be conducted before a single arbitrator under the AAA's Consumer Arbitration Rules that are in effect at the time the arbitration is initiated (referred to as the "AAA Rules") and under the procedures set forth in this section. The AAA Rules are available online at *www.adr.org/consumer*. Send a copy of your written demand for arbitration, as well as a copy of this provision, to the AAA in the manner described in the AAA Rules. You must also send a copy of your written demand to LG at LG Electronics, USA, Inc. Attn: Legal Department- Arbitration 111 Sylvan Avenue, Englewood Cliffs, NJ 07632. If there is a conflict between the AAA Rules and the rules set forth in this section, the rules set forth in this section will govern. This arbitration provision is governed by the Federal Arbitration Act. Judgment may be entered on the arbitrator's award in any court of competent jurisdiction. All issues are for the arbitrator to decide, except that issues relating to the scope and enforceability of the arbitration provision and to the arbitrability of the dispute are for the court to decide. The arbitrator is bound by the terms of this provision.

**Governing Law.** The law of the state of your residence shall govern this Limited Warranty and any disputes between us except to the extent that such law is preempted by or inconsistent with applicable federal law.

**Fees/Costs.** You do not need to pay any fee to begin an arbitration. Upon receipt of your written demand for arbitration, LG will promptly pay all arbitration filing fees to the AAA unless you seek more than $25,000 in damages, in which case the payment of these fees will be governed by the AAA Rules. Except as otherwise provided for herein, LG will pay all AAA filing, administration and arbitrator fees for any arbitration initiated in accordance with the AAA Rules and this arbitration provision. If you prevail in the arbitration, LG will pay your attorneys' fees and expenses as long as they are reasonable, by considering factors including, but not limited to, the purchase amount and claim amount. Notwithstanding the foregoing, if applicable law allows for an award of reasonable attorneys' fees and expenses, an arbitrator can award them to the same extent that a court would. If the arbitrator finds either the substance of your claim or the relief sought in the demand is frivolous or brought for an improper purpose (as measured by the standards set forth in Federal Rule of Civil Procedure 11(b)), then the payment of all arbitration fees will be governed by the AAA Rules. In such a situation, you agree to reimburse LG for all monies previously disbursed by it that are otherwise your obligation to pay under the AAA Rules. Except as otherwise provided for, LG waives any rights it may have to seek attorneys' fees and expenses from you if LG prevails in the arbitration.

**Hearings and Location.** If your claim is for $25,000 or less, you may choose to have the arbitration conducted solely on the basis of (1) documents submitted to the arbitrator, (2) through a telephonic hearing, or (3) by an in-person hearing as established by the AAA Rules. If your claim exceeds $25,000, the right to a hearing will be determined by the AAA Rules. Any in-person arbitration hearings will be held at a location within the federal judicial district in which you reside unless we both agree to another location or we agree to a telephonic arbitration.

**Opt Out.** You may opt out of this dispute resolution procedure. If you opt out, neither you nor LG can require the other to participate in an arbitration proceeding. To opt out, you must send notice to LG no later than 30 calendar days from the date of the first consumer purchaser's purchase of the product by either: (i) sending an e-mail to optout@lge.com, with the subject line: "Arbitration Opt Out" or (ii) calling 1- 800-980-2973. You must include in the opt out e-mail or provide by telephone: (a) your name and address; (b) the date on which the product was purchased; (c) the product model name or model number; and (d) the serial number (the serial number can be found (i) on the product; or (ii) online by accessing *https://www.lg.com/us/support* and clicking on "How do I find my model number?").

You may only opt out of the dispute resolution procedure in the manner described above (that is, by e-mail or telephone); no other form of notice will be effective to opt out of this dispute resolution procedure.

Opting out of this dispute resolution procedure will not affect the coverage of the Limited Warranty in any way, and you will continue to enjoy the full benefits of the Limited Warranty. If you keep this product and do not opt out, then you accept all terms and conditions of the arbitration provision described above.

# LIMITED WARRANTY (CANADA)

THE PRODUCT'S FULL LIMITED WARRANTY TERMS AND CONDITIONS ARE AVAILABLE AT *https://www.lg.com/ca_en/* AND/OR YOUR WARRANTY.

**ARBITRATION NOTICE:** THIS LIMITED WARRANTY CONTAINS AN ARBITRATION PROVISION THAT REQUIRES YOU AND LG TO RESOLVE DISPUTES BY BINDING ARBITRATION INSTEAD OF IN COURT, UNLESS THE LAWS OF YOUR PROVINCE OR TERRITORY DO NOT PERMIT THAT, OR, IN OTHER JURISDICTIONS, IF YOU CHOOSE TO OPT OUT. FOR FURTHER CLARITY, THIS ARBITRATION PROVISION IS NOT APPLICABLE TO CONSUMERS RESIDING IN ONTARIO, BRITISH COLUMBIA OR QUÉBEC. IN ARBITRATION, CLASS ACTIONS AND JURY TRIALS ARE NOT PERMITTED. PLEASE SEE THE SECTION TITLED "PROCEDURE FOR RESOLVING DISPUTES" BELOW.

- **DISCLAIMER:**
  IF YOU ARE A CONSUMER SUBJECT TO QUÉBEC, BRITISH COLUMBIA OR ONTARIO'S CONSUMER PROTECTION LEGISLATION, THE EXCLUSION OF WARRANTIES CONTAINED IN THIS SECTION DO NOT EXCLUDE OR LIMIT THE RIGHTS AND REMEDIES THAT YOU MAY HAVE UNDER SUCH ACT, INCLUDING THE RIGHT TO MAKE A CLAIM UNDER ANY OF THE STATUTORY WARRANTIES PROVIDED THEREUNDER.

**PROCEDURE FOR RESOLVING DISPUTES:**

EXCEPT WHERE PROHIBITED AT LAW (INCLUDING WITH RESPECT TO QUÉBEC, BRITISH COLUMBIA AND ONTARIO CONSUMERS), ALL DISPUTES BETWEEN YOU AND LG ARISING OUT OF OR RELATING IN ANY WAY TO THIS LIMITED WARRANTY OR THE PRODUCT SHALL BE RESOLVED EXCLUSIVELY THROUGH BINDING ARBITRATION, AND NOT IN A COURT OF GENERAL JURISDICTION. EXCEPT WHERE PROHIBITED AT LAW (INCLUDING WITH RESPECT TO QUÉBEC, BRITISH COLUMBIA AND ONTARIO CONSUMERS), YOU AND LG BOTH IRREVOCABLY AGREE TO WAIVE THE RIGHT TO A JURY TRIAL AND TO BRING OR PARTICIPATE IN A CLASS ACTION.

**Definitions.** For the purposes of this section, references to "LG" mean LG Electronics Canada, Inc., its parents, subsidiaries and affiliates, and each of their officers, directors, employees, agents, beneficiaries, predecessors in interest, successors, assigns and suppliers; references to "dispute" or "claim" shall include any dispute, claim or controversy of any kind whatsoever (whether based in contract, tort, statute, regulation, ordinance, fraud, misrepresentation or any other legal or equitable theory) arising out of or relating in any way to the sale, condition or performance of the product or this Limited Warranty.

**Notice of Dispute.** In the event you intend to commence an arbitration proceeding, you must first notify LG in writing at least 30 days in advance of initiating the arbitration by sending a letter to LGECI Legal Team at 20 Norelco Drive, North York, Ontario, Canada M9L 2X6 (the "Notice of Dispute"). You and LG agree to engage in good faith discussions in an attempt to amicably resolve your claim. The notice must provide your name, address, and telephone number; identify the product that is the subject of the claim; and describe the nature of the claim and the relief being sought. If you and LG are unable to resolve the dispute within 30 days of LG's receipt of the Notice of Dispute, the dispute shall be resolved by binding arbitration in accordance with the procedure set out herein. You and LG both agree that, during the arbitration proceeding, the terms (including any amount) of any settlement offer made by either you or LG will not be disclosed to the arbitrator until the arbitrator determines the dispute.

**Agreement to Binding Arbitration and Class Action Waiver.** Upon failure to resolve the dispute during the 30 day period after LG's receipt of the Notice of Dispute, you and LG agree to resolve any claims between you and LG only by binding arbitration on an individual basis, unless you opt out as provided below, or you reside in a jurisdiction that prevents full application of this clause in the circumstances of the claims at issue (in which case if you are a consumer, this clause will only apply if you expressly agree to the arbitration). To the extent permitted by applicable law, any dispute between you and LG shall not be combined or consolidated with a dispute involving any other person's or entity's product or claim. More specifically, without limitation of the foregoing, except to the extent such a prohibition is not permitted at law, any dispute between you and LG shall not under any circumstances proceed as part of a class or representative action. Instead of arbitration, either party may bring an individual action in small claims court, but that small claims court action may not be brought on a class or representative basis except to the extent this prohibition is not permitted at law in your province or territory of jurisdiction as it relates to the claims at issue between you and LG. This does not apply to consumers in Ontario, British Columbia and Québec. In accordance with provincial legislation, the consumer and LG may agree to resolve the dispute using any procedure available, including commencing the action before the competent courts of those provinces.

**Arbitration Rules and Procedures.** To begin arbitration of a claim, either you or LG must make a written demand for arbitration. The arbitration will be private and confidential, and conducted on a simplified and expedited basis before a single arbitrator chosen by the parties under the provincial or territorial commercial arbitration law and rules of the province or territory of your residence. You must also send a copy of your written demand to LG at LG Electronics, Canada, Inc., Attn: Legal Department- Arbitration, 20 Norelco Drive, North York, Ontario M9L 2X6. This arbitration provision is governed by your applicable provincial or territorial commercial arbitration legislation. For consumers in Ontario, British Columbia and Québec, the applicable

arbitration legislation only applies if consumers agree to submit the dispute to arbitration. Judgment may be entered on the arbitrator's award in any court of competent jurisdiction. All issues are for the arbitrator to decide, except that, issues relating to the scope and enforceability of the arbitration provision and to the arbitrability of the dispute are for the court to decide. The arbitrator is bound by the terms of this provision.

**Governing Law.** The law of the province or territory of your purchase shall govern this Limited Warranty and any disputes between you and LG except to the extent that such law is preempted by or inconsistent with applicable federal or provincial/territorial law. Should arbitration not be permitted for any claim, action, dispute or controversy between you and LG, you and LG attorn to the exclusive jurisdiction of the courts of the province or territory of your purchase for the resolution of the claim, action, dispute or controversy between you and LG.

**Fees/Costs.** You do not need to pay any fee to begin an arbitration. Upon receipt of your written demand for arbitration, LG will promptly pay all arbitration filing fees unless you seek more than $25,000 in damages, in which case the payment of these fees will be governed by the applicable arbitration rules. Except as otherwise provided for herein, LG will pay all filing, administration and arbitrator fees for any arbitration initiated in accordance with the applicable arbitration rules and this arbitration provision. If you prevail in the arbitration, LG will pay your attorneys' fees and expenses as long as they are reasonable, by considering factors including, but not limited to, the purchase amount and claim amount. Notwithstanding the foregoing, if applicable law allows for an award of reasonable attorneys' fees and expenses, an arbitrator can award them to the same extent that a court would. If the arbitrator finds either the substance of your claim or the relief sought in the demand is frivolous or brought for an improper purpose (as measured by the applicable laws), then the payment of all arbitration fees will be governed by the applicable arbitration rules. In such a situation, you agree to reimburse LG for all monies previously disbursed by it that are otherwise your obligation to pay under the applicable arbitration rules. Except as otherwise provided for, LG waives any rights it may have to seek attorneys' fees and expenses from you if LG prevails in the arbitration.

**Hearings and Location.** If your claim is for $25,000 or less, you may choose to have the arbitration conducted solely (1) on the basis of documents submitted to the arbitrator, (2) through a telephonic hearing, or (3) by an in-person hearing as established by the applicable arbitration rules. If your claim exceeds $25,000, the right to a hearing will be determined by the applicable arbitration rules. Any in-person arbitration hearings will be held at the nearest, most mutually-convenient arbitration location available within the province or territory in which you reside unless you and LG both agree to another location or agree to a telephonic arbitration.

**Severability and Waiver.** If any portion of this Limited Warranty (including these arbitration procedures) is unenforceable, the remaining provisions will continue in full force and effect to the maximum extent permitted by applicable law. Should LG fail to enforce strict performance of any provision of this Limited Warranty (including these arbitration procedures), it does not mean that LG intends to waive or has waived any provision or part of this Limited Warranty.

**Opt Out.** The arbitration provision requires you and LG to resolve disputes by binding arbitration instead of court, unless the laws of your province or territory do not permit that, or, in other jurisdictions, if you choose to opt out. The arbitration provision does not apply to consumers in Ontario, British Columbia and Québec.

For individuals that fall within the binding arbitration provisions, you may opt out of this dispute resolution procedure. If you opt out, neither you nor LG can require the other to participate in an arbitration proceeding. To opt out, you must send notice to LG no later than 30 calendar days from the date of the first consumer purchaser's purchase of the product by either (i) sending an e-mail to optout@lge.com, with the subject line: "Arbitration Opt Out;" or (ii) calling 1-800-980-2973. You must include in the opt out e-mail or provide by telephone: (a) your name and address; (b) the date on which the product was purchased; (c) the product model name or model number; and (d) the serial number (the serial number can be found (i) on the product; or (ii) online by accessing *https://www.lg.com/ca_en/findmodel_serial/* ).

In the event that you "Opt Out", the law of the province or territory of your residence shall govern this Limited Warranty and any disputes between you and LG except to the extent that such law is preempted by or inconsistent with applicable federal or provincial/territorial law. Should arbitration not be permitted for any claim, action, dispute or controversy between you and LG, you and LG agree to attorn to the exclusive jurisdiction of the courts of the province or territory of your residence for the resolution of the claim, action, dispute or controversy between you and LG.

You may only opt out of the dispute resolution procedure in the manner described above (that is, by e-mail or telephone); no other form of notice will be effective to opt out of this dispute resolution procedure. Opting out of this dispute resolution procedure will not affect the coverage of the Limited Warranty in any way, and you will continue to enjoy the full benefits of the Limited Warranty. If you keep this product and do not opt out, then you accept all terms and conditions of the arbitration provision described above.

**Conflict of Terms.** In the event of a conflict or inconsistency between the terms of this Limited Warranty and the End User License Agreement ("EULA") in regards to dispute resolution, the terms of this Limited Warranty shall control and govern the rights and obligations of the parties and shall take precedence over the EULA.

