SPIRIT

E-210 • E-310 • E-325
E-425 • SB-E-425 • SC-E-425 • S-425 • E-435
EP-325 • EP-325 STEALTH
EP-425 • EP-425 STEALTH • EP-435 • SP-425 • SP-435

LP Owner's Manual

Keep this Owner's Manual for future reference, thoroughly read through it, and if you have any questions please contact us today.

REGISTER TODAY

Register your gas grill and receive special content to make you the ultimate backyard hero.
Scan the QR Code or register online at weber.com

Important Safety Information

DANGER, WARNING, and CAUTION statements are used throughout this Owner's Manual to emphasize critical and important information. Read and follow these statements to help ensure safety and prevent property damage. The statements are defined below.

⚠ **DANGER:** Indicates a hazardous situation which, if not avoided, ***will result in death or serious injury***.

⚠ **WARNING:** Indicates a hazardous situation which, if not avoided, ***could result in death or serious injury***.

⚠ **CAUTION:** Indicates a hazardous situation which, if not avoided, ***could result in minor or moderate injury***.

USE OUTDOORS ONLY.

READ THE INSTRUCTIONS BEFORE USING THE APPLIANCE (GRILL).

NOTICE TO INSTALLER: These instructions must be left with the consumer.

NOTICE TO CONSUMER: Retain these instructions for future reference.

⚠ DANGER

If you smell gas:

- **Shut off gas to the appliance (grill).**
- **Extinguish any open flame.**
- **Open lid.**
- **If odor continues, keep away from the appliance (grill) and immediately call your gas supplier or your fire department.**

⚠ WARNING

- **Do not store or use gasoline or other flammable liquids or vapors in the vicinity of this (grill) or any other appliance.**
- **An LP cylinder (tank) not connected for use shall not be stored in the vicinity of this (grill) or any other appliance.**

Serial Number

Write your grill's serial number in the box above for future reference.
The serial number is on the grill's data label.

Installation and Assembly

⚠ **DANGER: This grill is not intended to be installed in or on recreational vehicles or boats.**

⚠ **WARNING: Do not use this grill unless all parts are in place and the grill was properly assembled according to the assembly instructions.**

⚠ **WARNING: Do not build this model of grill in any built-in or slide-in construction.**

⚠ **WARNING: Do not modify the appliance (grill). Liquid propane gas is not natural gas. The conversion or attempted use of natural gas in a liquid propane gas unit or liquid propane gas in a natural gas unit is unsafe and will void your warranty.**

- In the United States, installation must conform with local codes or, in the absence of local codes, with either the National Fuel Gas Code, ANSI Z223.1/NFPA 54, Natural Gas and Propane Installation Code, CSA B149.1; or Propane Storage and Handling Code, B149.2; or the Standard for Recreational Vehicles, ANSI A119.2/NFPA 1192, and CSA Z240 RV Series, Recreational Vehicle Code, as applicable.
- In Canada, the installation of this grill must comply with local codes and/or the latest edition of Standard CAN/CSA-B149.2 (Propane Storage and Handling Code). These instructions, while generally acceptable, do not necessarily comply with the Canadian installation codes, particularly with piping above and below ground.
- In Mexico, if there are local codes that apply to portable gas appliances, you must comply with the latest edition of Official Mexican Standard (NOM).
- If an external electrical source is utilized (such as a rotisserie) it must be electrically grounded in accordance with local codes or, in the absence of local codes, with the National Electrical Code, ANSI/NFPA 70, or the Canadian Electrical Code, Part 1, CSA C22.1.

Operation

⚠ **DANGER: Only use the grill outdoors in a well-ventilated area. Do not use in a garage, building, breezeway, tent, any other enclosed area, or beneath overhead combustible construction.**

- An appliance is considered to be outdoors if installed with shelter no more inclusive than with walls on three sides, but with no overhead cover; all openings must be permanently open; sliding doors, garage doors, windows, or screened openings are not considered as permanent openings.
- An appliance is considered to be outdoors if installed with shelter no more inclusive than within a partial enclosure that includes an overhead cover and no more than two sidewalls. The sidewalls may be parallel, as in a breezeway, or at right angles to each other; all openings must be permanently open; sliding door, garage doors, windows, or screened openings are not considered as permanent openings.
- An appliance is considered to be outdoors if installed with shelter no more inclusive than within a partial enclosure that included an overhead cover and three sidewalls, as long as 30% or more of the horizontal periphery of the enclosure is permanently open. All openings must be permanently open; sliding doors, garage doors, windows, or screened openings are not considered as permanent openings.
- The minimum ambient operating temperature for safe use of the appliance shall be 0° F (-17° C).

⚠ **DANGER: Do not use the grill in any vehicle or in any storage or cargo area of any vehicle. This includes, but is not limited to, cars, trucks, station wagons, mini-vans, sport utility vehicles, recreational vehicles, and boats.**

⚠ **DANGER: Do not use the grill within 24 inches (61 cm) of combustible materials.**

⚠ **DANGER: Keep the cooking area clear of flammable vapors and liquids such as gasoline, alcohol, etc., and combustible materials.**

⚠ **DANGER: The grill is not intended for and should never be used as a heater.**

8653795_012026 enUS

⚠ **DANGER: This appliance (grill) must be kept away from flammable materials during use.**
⚠ **DANGER: Do not put a grill cover or anything flammable on, or in the storage area under the grill while it is in operation or is hot.**
⚠ **DANGER: Should a grease fire occur, turn off all burners and leave lid closed until fire is out.**
⚠ **WARNING: Accessible parts may be very hot. Keep young children away.**
⚠ **WARNING: The use of alcohol, prescription drugs, non-prescription drugs, or illegal drugs may impair the consumer's ability to properly and safely assemble, move, store, or operate the grill.**
⚠ **WARNING: Never leave the grill unattended during pre-heating or use. Exercise caution when using this grill. The entire cookbox gets hot when in use.**
⚠ **WARNING: Do not move the appliance (grill) during use.**
⚠ **WARNING: Keep any electrical supply cord and the fuel supply hose away from any heated surfaces.**
⚠ **CAUTION: This product has been safety-tested and is only certified for use in a specific country. Refer to country designation located on outside of box.**
⚠ **CAUTION: The grill is not intended for commercial use.**
⚠ **CAUTION: Do not use charcoal or lava rock in the grill.**

Storage and/or Non-Use

⚠ **WARNING: Turn off the gas supply at the gas cylinder (tank) after use.**
⚠ **WARNING: LP tanks must be stored outdoors out of the reach of children and must not be stored in a building, garage, or any other enclosed space.**
⚠ **WARNING: After a period of storage and/or nonuse, the grill should be checked for gas leaks and burner obstructions before use.**
⚠ **Storage of the grill indoors is permissible only if the LP tank is disconnected and removed from the grill.**

California Proposition 65

⚠ **WARNING: Combustion byproducts produced when using this product contain chemicals known to the state of California to cause cancer, birth defects, or other reproductive harm.**

⚠ **PROPOSITION 65 WARNING:** Handling the brass material on this product exposes you to lead, a chemical known to the state of California to cause cancer, birth defects, or other reproductive harm. *Wash hands after handling this product.*

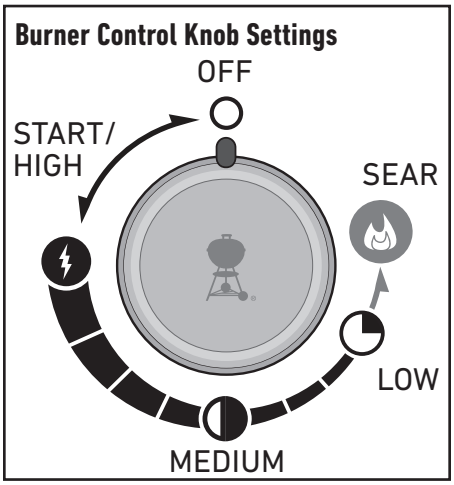

Limited Warranty

Thank you for purchasing a WEBER product. Weber-Stephen Products LLC, 1415 S. Roselle Road, Palatine, Illinois 60067 ("WEBER") prides itself on delivering a safe, durable, and reliable product.
This is WEBER's Limited Warranty ("Warranty") provided to you at no extra charge. It contains the information you will need to have your WEBER product repaired in the unlikely event of a failure or defect.
Pursuant to applicable laws, the customer has several rights in case the product is defective. Those rights include supplementary performance or replacement, abatement of the purchasing price, and compensation. These and other statutory rights remain unaffected by this warranty provision. In fact, this warranty grants additional rights to the Owner that are independent from statutory warranty provisions.

WEBER'S LIMITED WARRANTY

WEBER warrants, to the purchaser of the WEBER product (or in the case of a gift or promotional situation, the person for whom it was purchased as a gift or promotional item) ("Owner"), that the WEBER product is free from defects in material and workmanship for the period(s) of time specified below when assembled and operated in accordance with the accompanying Owner's Manual, normal wear and tear excluded . (Note: If you lose or misplace your WEBER Owner's Manual, a replacement is available online at www.weber.com.) WEBER agrees within the framework of this warranty to repair or replace the part that is defective in material or workmanship subject to the limitations, and exclusions listed below. TO THE EXTENT ALLOWABLE BY APPLICABLE LAW, THIS WARRANTY IS EXTENDED ONLY TO THE ORIGINAL PURCHASER AND IS NOT TRANSFERABLE TO SUBSEQUENT OWNERS, EXCEPT IN THE CASE OF GIFTS AND PROMOTIONAL ITEMS AS NOTED ABOVE.
WEBER stands by its products and is happy to provide you with the Warranty described for material defects in the grill or its relevant components, normal wear and tear excepted.
- 'Normal wear and tear' includes cosmetic and other immaterial deterioration that may come with ownership of your grill over time, such as surface rust, dents / scratches, etc.

However, WEBER will honor this Warranty for the grill or its relevant components where damage or dysfunction results from a material defect.
- 'Material defect' includes rust through or burn through of certain parts, or other damage or failure inhibiting your ability to safely / properly use your grill.

OWNER'S RESPONSIBILITIES UNDER THIS WARRANTY

To ensure trouble-free warranty coverage, it is important (but it is not required) that you register your WEBER product online at www.weber.com. Please also retain your original sales receipt and/or invoice. Registering your WEBER product confirms your warranty coverage and provides a direct link between you and WEBER in case we need to contact you. If you have not had time to register your grill before calling for Warranty service, please have the following information available when you do call:
Name – Address – Phone Number – Email – Serial Number – Purchase Date – Purchase Dealer – Model – Color – Primary Issue
The above warranty only applies if the Owner takes reasonable care of the WEBER product by following all assembly instructions, usage instructions, and preventative maintenance as outlined in the accompanying Owner's Manual, unless the Owner can prove that the defect or failure is independent of non-compliance with the above mentioned obligations. If you live in a coastal area, or have your product located near a pool, maintenance includes regular washing and rinsing of the exterior surfaces as outlined in the accompanying Owner's Manual.

WARRANTY HANDLING / EXCLUSION OF WARRANTY

If you believe that you have a part which is covered by this Warranty, please contact WEBER Customer Service using the contact information on our website (www.weber.com, or such country-specific website to which Owner may be redirected). WEBER will, upon investigation, repair or replace (at its option) a defective part that is covered by this Warranty. In the event that repair or replacement are not possible, WEBER may choose (at its option) to replace the grill in question with a new grill of equal or greater value. WEBER may ask you to return parts for inspection, shipping charges to be pre-paid by owner.
When you contact Customer Service, please have the following information available:
Name – Address – Phone Number – Email – Serial Number – Purchase Date – Purchase Dealer – Model – Color – Primary Issue

This WARRANTY lapses if there are damages, deteriorations, discolorations, and/or rust for which WEBER is not responsible caused by:
- Abuse, misuse, alteration, modification, misapplication, vandalism, neglect, improper assembly or installation, and failure to properly perform normal and routine maintenance;
- Insects (such as spiders) and rodents (such as squirrels), including but not limited to damage to burner tubes and/or gas hoses;
- Exposure to salt air and/or chlorine sources such as swimming pools and hot tubs/spas;
- Severe weather conditions such as hail, hurricanes, earthquakes, tsunamis or surges, tornadoes or severe storms.
- Acid rain and other environmental factors.

Using third party parts will not void this Warranty. However, any parts that are used and/or installed on your WEBER product that are not genuine WEBER parts are not covered by this Warranty. In addition, any damages that result from the use and/or installation of parts on your WEBER product that are not genuine WEBER parts are not covered by this Warranty. Any conversion of a gas grill not authorized by WEBER and performed by a WEBER authorized service technician will void this Warranty.

PRODUCT WARRANTY PERIODS

Cookbox:
10 years, no rust through/burn through
(2 years paint excluding fading or discoloration)

Lid assembly:
10 years, no rust through/burn through
(2 years paint excluding fading or discoloration)

Stainless steel burner tubes:
10 years, no rust through/burn through

Stainless steel cooking grates:
5 years, no rust through/burn through

Stainless steel FLAVORIZER BARS:
5 years, no rust through/burn through

Porcelain-enameled cast iron cooking grates:
5 years, no rust through/burn through

Electronic Components:
3 years

All remaining parts:
2 years

DISCLAIMERS

APART FROM THE WARRANTY AND DISCLAIMERS AS DESCRIBED IN THIS WARRANTY STATEMENT, THERE ARE EXPLICITLY NO FURTHER WARRANTY OR VOLUNTARY DECLARATIONS OF LIABILITY GIVEN HERE WHICH GO BEYOND THE STATUTORY LIABILITY APPLYING TO WEBER. THE PRESENT WARRANTY STATEMENT ALSO DOES NOT LIMIT OR EXCLUDE SITUATIONS OR CLAIMS WHERE WEBER HAS MANDATORY LIABILITY AS PRESCRIBED BY STATUTE.
NO WARRANTIES SHALL APPLY AFTER THE APPLICABLE PERIODS OF THIS WARRANTY. NO OTHER WARRANTIES GIVEN BY ANY PERSON, INCLUDING A DEALER OR RETAILER, WITH RESPECT TO ANY PRODUCT (SUCH AS ANY "EXTENDED WARRANTIES"), SHALL BIND WEBER. THE EXCLUSIVE REMEDY OF THIS WARRANTY IS REPAIR OR REPLACEMENT OF THE PART OR PRODUCT.
IN NO EVENT UNDER THIS WARRANTY SHALL RECOVERY OF ANY KIND BE GREATER THAN THE AMOUNT OF THE PURCHASE PRICE OF THE WEBER PRODUCT SOLD.
YOU ASSUME THE RISK AND LIABILITY FOR LOSS, DAMAGE, OR INJURY TO YOU AND YOUR PROPERTY AND/OR TO OTHERS AND THEIR PROPERTY ARISING OUT OF THE MISUSE OR ABUSE OF THE PRODUCT OR FAILURE TO FOLLOW INSTRUCTIONS PROVIDED BY WEBER IN THE ACCOMPANYING OWNER'S MANUAL.
PARTS AND ACCESSORIES REPLACED UNDER THIS WARRANTY ARE WARRANTED ONLY FOR THE BALANCE OF THE ABOVE MENTIONED ORIGINAL WARRANTY PERIOD(S).
THIS WARRANTY APPLIES TO PRIVATE SINGLE FAMILY HOME OR APARTMENT USE ONLY AND DOES NOT APPLY TO WEBER GRILLS USED IN COMMERCIAL, COMMUNAL OR MULTI-UNIT SETTINGS SUCH AS RESTAURANTS, HOTELS, RESORTS, OR RENTAL PROPERTIES.
WEBER MAY FROM TIME TO TIME CHANGE THE DESIGN OF ITS PRODUCTS. NOTHING CONTAINED IN THIS WARRANTY SHALL BE CONSTRUED AS OBLIGATING WEBER TO INCORPORATE SUCH DESIGN CHANGES INTO PREVIOUSLY MANUFACTURED PRODUCTS, NOR SHALL SUCH CHANGES BE CONSTRUED AS AN ADMISSION THAT PREVIOUS DESIGNS WERE DEFECTIVE.

Weber-Stephen Products LLC
Customer Service Center
1415 S. Roselle Road
Palatine, IL 60067
U.S.A.

For replacement parts, call:
1-800-446-1071

Important Information about LP Gas & Gas Connections

What Is LP Gas?

Liquefied petroleum gas, also called LP, LP gas, liquid propane, or simply propane or butane, is the flammable, petroleum-based product used to fuel your grill. It is a gas at moderate temperatures and pressure when it is not contained. But at moderate pressure inside a container, such as a tank, LP is a liquid. As pressure is released from the tank, the liquid readily vaporizes and becomes gas.

Safe Handling Tips For LP Tanks

- A dented or rusty liquid propane tank may be hazardous and should be checked by your liquid propane supplier. Do not use a liquid propane tank with a damaged valve.
- Although your liquid propane tank may appear to be empty, gas may still be present, and the tank should be transported and stored accordingly.
- The LP tank must be installed, transported, and stored in an upright, secure position. LP tanks should not be dropped or handled roughly.
- Never store or transport the LP tank where temperatures can reach 125° F (51.7° C) (the tank will become too hot to hold by hand).
- Place dust cap on cylinder valve outlet whenever the cylinder is not in use. Only install the type of dust cap on the cylinder valve outlet that is provided with the cylinder valve. Other types of caps or plugs may result in leakage of propane.

LP Tank Requirements

- The tank must be approximately 18¼ inches (46.35 cm) high and 12¼ inches (31.1 cm) in diameter with a marked 20 pound (9.07 kg) LP capacity or 47.6 pound (21.6 kg) water capacity as stated by the manufacturer. Other tanks may be acceptable provided they are compatible with the grill retention means (tank scale).
- The tank used must be constructed and marked in accordance with the Specifications for LP gas Cylinders of the U.S. Department of Transportation (D.O.T.); or the Canadian Standard for Cylinders, Spheres and Tubes for Transportation of Dangerous Goods and Commission, CAN/CSA-B339, as applicable.
- Tanks must be provided with a listed OPD (Overfilling Prevention Device) and a Type 1 (CGA 791) tank connection. The tank connection must be compatible with the grill connection.
- The tank must include a collar to protect the tank valve.
- Tanks must have a D.O.T. certification **(A)**, and a testing date **(B)** that is within five years of current use.

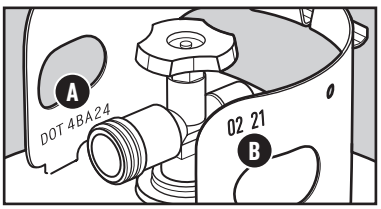

What is a Regulator?

Your gas grill is equipped with a pressure regulator, which is a device to control and maintain uniform gas pressure as gas is released from the LP tank.

Regulator Requirements

- Each WEBER pressure regulator is designed for vapor withdrawal. Cylinder must be upright when grill is in use.
- The regulator and hose assembly supplied with this grill must be used. This regulator has a flow limiting device built into the unit that will restrict the flow of gas in the event that a leak is detected.
- Replacement regulator and hose assemblies must be as specified by Weber-Stephen Products LLC (UL-listed Type 1 (CGA 791) tank connection device as described in the latest edition of ANSI Z21.81).

LP Tank Installation

While using the gas hose, use care to route the gas hose away from the cookbox and other hot surfaces.

Only use the hose assembly as supplied with this appliance for connection to the cylinder - DO NOT USE ADAPTORS.

Inspect the Tank

1) Confirm that the tank valve is fully closed. Close by turning valve clockwise.
2) Inspect the tank valve, including the internal rubber seal for damage or debris **(A)**. If damaged, return tank to local retailer.
3) Confirm that the tank valve is the proper mating type for the regulator **(B)**.

⚠ **The tank must be secured inside the cabinet.**

LP Tank Requirements

- Use a tank with a maximum capacity of 20 pounds (9.07 kg).

LP Tank Installation

1) Open the door of the cabinet.
2) Lift LP tank into position inside the cabinet **(C)**.
3) Turn the LP tank so the opening of the valve faces the front or inside of the cabinet.
4) Secure the LP tank by tighting the hand wheel on the base of the cabinet **(D)**.

Connect the Gas Hose to the Tank

1) Check that the burner control knob(s) is(are) in the off ○ position. Check by pushing in and turning knob(s) clockwise.
2) Connect the gas hose coupling to the LP tank. Hand tighten only.

   a) Tighten by turning the fitting clockwise **(C)**.

Refilling or Replacing an LP Tank

Removal of the LP Tank

1) Make sure the grill is off and cool.
2) Confirm that the tank valve is fully closed. Close by turning valve clockwise.
3) Unscrew regulator coupling by turning counterclockwise by hand.
4) Loosen the hand wheel on the base of the cabinet.
5) Lift tank off of the cabinet.

Inspect the Hose

Routine inspection of the hose is necessary.

1) Confirm that the grill is off and cool.
2) Check hose for any signs of cracking, abrasions, or cuts **(A)**. If the hose is found to be damaged in any way, do not use the grill.

⚠ **WARNING: If the hose is found to be damaged in any way, do not use the grill. Replace using only WEBER authorized replacement hose.**

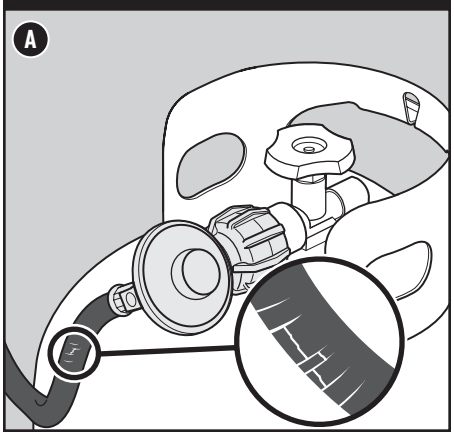

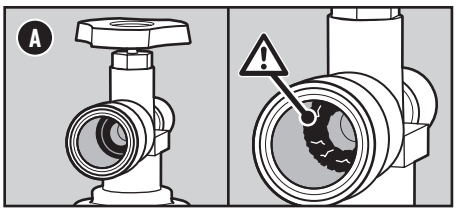

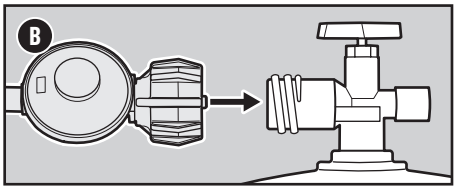

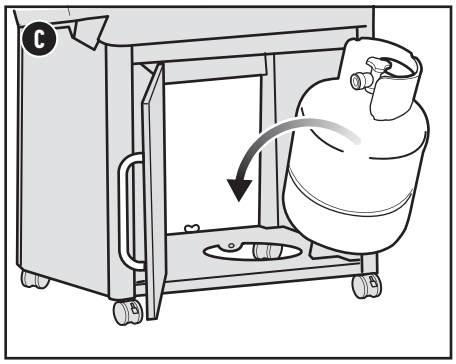

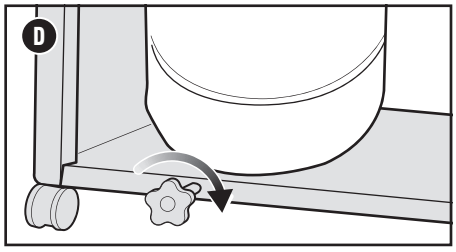

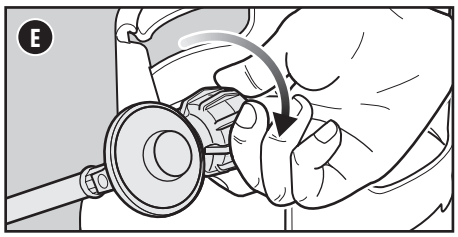

⚠ **DANGER: Do not line the slide-out grease tray or cookbox with aluminum foil.**

⚠ **DANGER: Check the slide-out grease tray and catch pan for grease build-up before each use. Remove excess grease to avoid a grease fire.**

⚠ **WARNING: Use caution when removing catch pan and disposing of hot grease.**

⚠ **WARNING: Use heat-resistant barbecue mitts or gloves when operating grill.**

⚠ **WARNING: Grill brushes should be checked for loose bristles and excessive wear on a regular basis. Replace brush if any loose bristles are found on cooking grates or brush. WEBER recommends purchasing a new stainless steel bristle grill brush at the beginning of every spring.**

⚠ **WARNING: Keep ventilation openings around tank clear and free of debris.**

⚠ **WARNING: The hose must be secured with the Hose Retention Clip. Failure to do so could cause damage to the hose resulting in a fire or explosion which can cause serious bodily injury or death, and damage to property.**

⚠ **WARNING: Keep any electrical supply cord and the fuel supply hose away from heated surfaces.**

Leak Checking

What is a Leak Check?

Once the LP tank is properly installed, it is necessary to perform a leak check. A leak check is a reliable way to verify that gas is not escaping after you connect the tank. The fuel system in your grill features factory-made connections that have been thoroughly checked for gas leaks and the burners have been flame-tested. WEBER recommends performing a thorough leak check after assembly, as well as annually. The following fittings should be tested:

• Where the regulator connects to the tank.

Checking for Gas Leaks

1) Wet fittings **(A)** with a soap and water solution, using a spray bottle, brush, or rag. You can make your own soap and water solution by mixing 20% liquid soap with 80% water; or, you can purchase leak check solution in the plumbing section of any hardware store.
2) Slowly open gas supply by turning tank valve counterclockwise while checking for bubbles.
3) If bubbles appear there is a leak:
   a) If the leak is at the cylinder **(B)**, turn off the gas. DO NOT OPERATE THE GRILL. Disconnect the tank and return the tank to your local retailer.
   b) If the leak is at the regulator **(C)**, turn off the gas. NEVER ATTEMPT TO TIGHTEN THE REGULATOR WITH TANK VALVE OPEN. DO NOT OPERATE THE GRILL. Contact the Customer Service Representative in your area using the contact information on our website.

   If a leak is present, contact the Customer Service Representative in your area using the contact information on our website.
4) If bubbles do not appear, leak checking is complete:
   a) Turn gas supply off at the tank and rinse connections with water.

NOTE: Since some leak test solutions, including soap and water, may be slightly corrosive, all connections should be rinsed with water after checking for leaks.

Additional Leak Check Precautions

The following fittings should be tested for gas leaks each time a tank is refilled and reinstalled:

• At the cylinder **(B)** and at the regulator **(C)**.

Follow the instructions for "Checking for Gas Leaks".

⚠ DANGER: Do not use a flame to check for gas leaks. Be sure there are no sparks or open flames in the area while you check for leaks.
⚠ DANGER: Leaking gas may cause a fire or explosion.
⚠ DANGER: Do not operate the grill if there is a gas leak present.
⚠ DANGER: If you see, smell, or hear the hiss of gas escaping from the liquid propane tank:
1) Move away from liquid propane tank.
2) Do not attempt to correct the problem yourself.
3) Call your fire department.
⚠ DANGER: Always close the tank valve before disconnecting the regulator. Do not attempt to disconnect the gas regulator and hose assembly or any gas fitting while this grill is in operation.
⚠ DANGER: Do not store a spare LP tank under or near this grill. Never fill the tank beyond 80% full. Failure to follow these statements exactly may result in a fire causing death or serious injury.

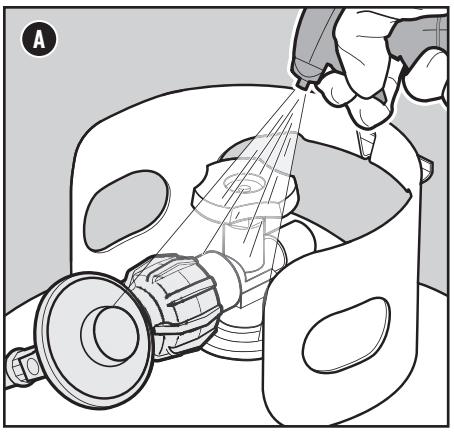

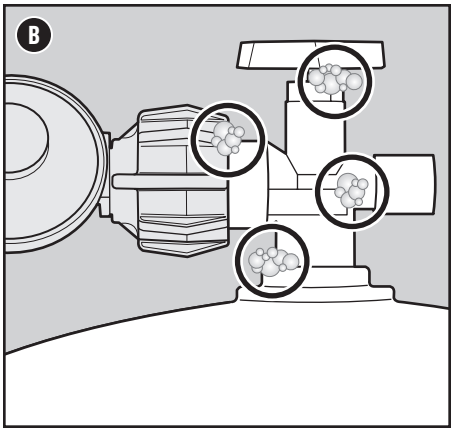

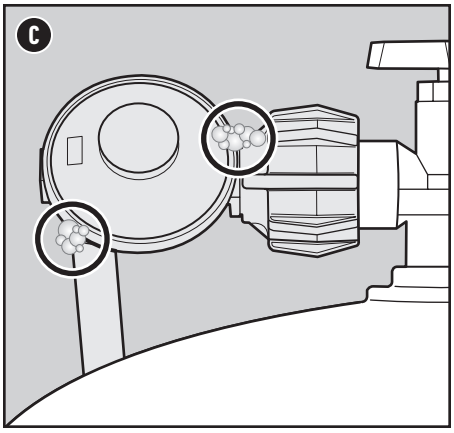

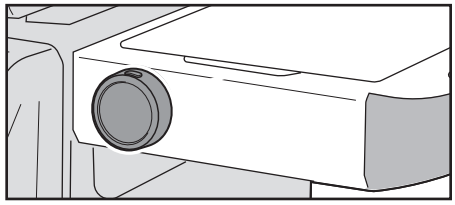

Digital Temperature Display

This feature is only available on select models.

The digital temperature display gives you a convenient way to check the surface temperature of your grill. While the grill is in use, please follow these instructions for using the digital temperature display:

Turning the Display ON

1) Press and hold the power button for 2 seconds to turn on the display. The power button is located on the top of the display unit.

NOTE: The grill should always be pre-heated for 10 min or more. If display is turned on when the grill is off, display lights will cycle through a startup sequence for the first 4 minutes while the grill temperature is registering with the display. If display is turned on after grill is lit, the display will automatically show the grill temperature.

2) If you want to change between Fahrenheit **(F°)** and Celsius **(C°)**, pull the display unit from the table to access the button on the back. Push the button to toggle between these options.

Brightness

Once powered on, the display will be at 100% brightness for 15 minutes, then will dim slightly to preserve battery life. To refresh the display to 100% brightness simply tap the power button and the display unit will update to 100% brightness for 2 minutes.

Turning the Display OFF

1) To manually shut off, press and hold the power button for 2 seconds.

NOTE: The display will automatically turn off after no heat has been detected for 4 minutes or the grill has completely cooled.

Error Code: E-8: If there is a detached thermocouple, "E-8" will be shown on display. Please contact WEBER Customer Service for assistance.

Batteries

When it is time to change the 2 AAA batteries, a low battery icon will appear at the bottom of the display screen. Pull the display unit from the table to access the battery door.

Use alkaline batteries only. Do not mix old and new batteries or different types of batteries (standard, alkaline, or rechargeable). Always purchase the correct size and grade of battery most suitable for the intended use. Clean the battery contacts and also those of the device prior to battery installation. Remove batteries from equipment that is not to be used for an extended period of time. Remove used batteries promptly



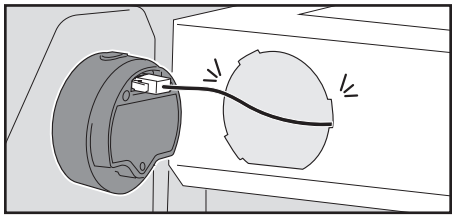

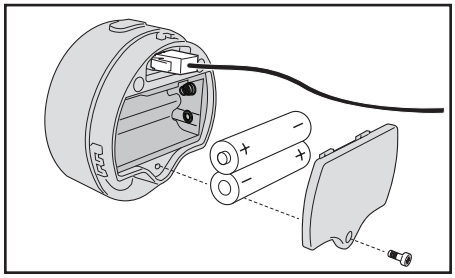

Igniting the Grill

Using the Snap Ignition System to Ignite Burners

Each control knob snap igniter creates a spark from the igniter electrode to the burner lighting tube. You generate the energy for the spark by pushing in the control knob and turning it to the start/high position. Each control knob operates an individual burner, and each burner ignites independently. Ignite the burners starting from left to right. All burners should be lit for preheating, however, all burners do not have to be lit while cooking.

1) Open the lid **(A)**.
2) Check that all burner control knobs are in the off ○ position. Check by pushing in and turning knobs clockwise **(B)**.
   Note: It is important that all burner control knobs are in the off ○ position before turning on the LP tank. If they are not, the flow limiting device built into the regulator will activate, limiting the flow of gas from the LP tank.
3) Turn the LP tank on by slowly turning the tank valve counterclockwise; wait 60 seconds **(C)**.
   Note: It is important that the LP tank is turned on slowly. If it is opened too quickly, the flow limiting device built into the regulator will activate, limiting the flow of gas from the LP tank.
4) Begin with the burner furthest to the left. Push and hold the control knob in for two seconds **(D)** then turn it counterclockwise to the start/high position until you hear it snap **(E)**. Continue to hold the control knob in for two seconds after you hear the snap. This action will spark the igniter and light the burner.
5) Check that the burner is lit by looking through the cooking grates.
6) If the burner does not ignite with the first snap of the the ignition, turn burner control knob to the off ○ position and repeat the lighting procedure a second time.
   If the burner still does not light within 4 seconds, turn the burner control knob to the off ○ position and wait five minutes to let the gas clear before you try again or try to light with a match.
7) If the burner ignites, repeat steps 4 through 6 to light the remaining burners.

Should the burners fail to ignite using the snap ignition, refer to the TROUBLESHOOTING section in this Owner's Guide. There you will find instructions on igniting the grill with a match to help determine the exact problem.

Preheat the Grill

Preheating the grill is critical to successful grilling. Preheating helps to prevent food from sticking to the grate and gets the grate hot enough to sear properly. It also burns off residue of a previously cooked meal.

1) Open the grill lid.
2) Ignite your grill according to the ignition instructions in this Owner's Manual.
3) Close lid.
4) Preheat the grill with all burners on the start/high position for 15 minutes or until thermometer registers 500° F (260° C).

To Extinguish Burners

1) Push each burner control knob in and then turn clockwise all the way to the off ○ position.
2) Turn gas supply off at the LP tank.

⚠ WARNING: Open lid during ignition.

⚠ WARNING: Do not lean over open grill while igniting or cooking.

⚠ WARNING: Each burner must be ignited individually.

⚠ WARNING: If ignition does not occur within four seconds of attempting to light the first burner, turn the burner control knob to the off position. Wait five minutes to allow accumulated gas to dissipate, and then repeat the lighting procedure.

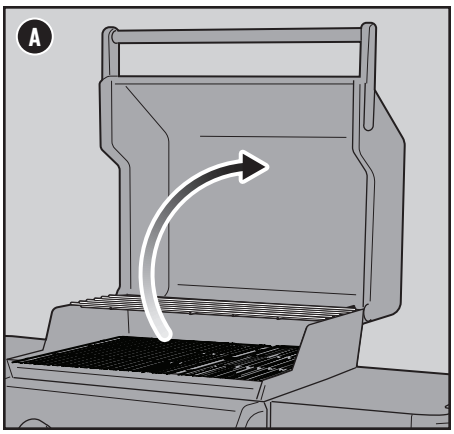

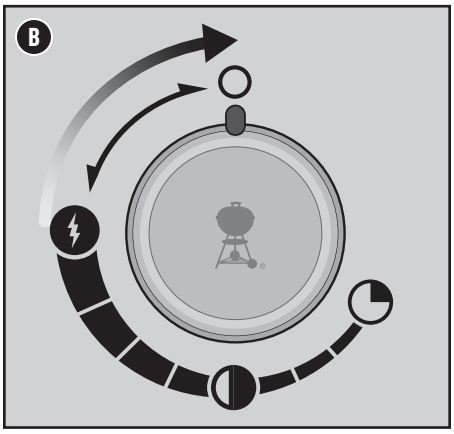

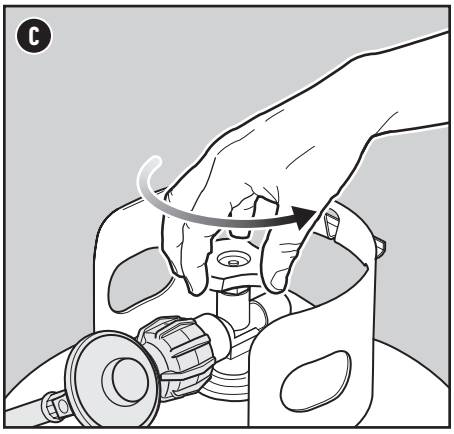

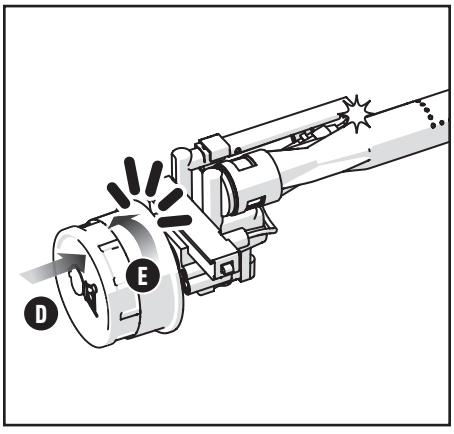

Using the sear zone

This feature is only available on select models.

Searing is a direct grilling technique used on meats, such as steak, poultry parts, fish and chops. Searing browns the surface of the food at a high temperature. By searing both sides of the meat, you caramelize the food surface, creating a more desirable flavor.

The two adjacent burners in the sear zone have an additional setting which boosts the heat output to searing temperatures. To use the sear zone:

1) Open the lid and ignite all of the burners. Refer to IGNITING THE GRILL.
2) Preheat the grill with the lid closed and with all burners on the start/high position for 15 minutes.
3) After preheating, push the two burner control knobs in and turn counterclockwise to the sear position **(F)**. The sear burners work in tandem **(G)**. The remaining burner(s) can be turned to off or low.
4) Place meat directly over the sear zone and close lid. Sear each side anywhere from one to four minutes **(H)**, depending on the type and thickness of meat. Once searing is complete, the meat can be moved to moderate heat over and cooked to your desired doneness.

Note: Always cook with the lid closed to achieve maximum heat and to avoid flare-ups.

As you gain experience using the sear zone we encourage you to experiment with different searing times to find the results that work best for your taste.

To Extinguish Burners

1) Push each burner control knob in and then turn clockwise all the way to the off ○ position.
2) Turn gas supply off.

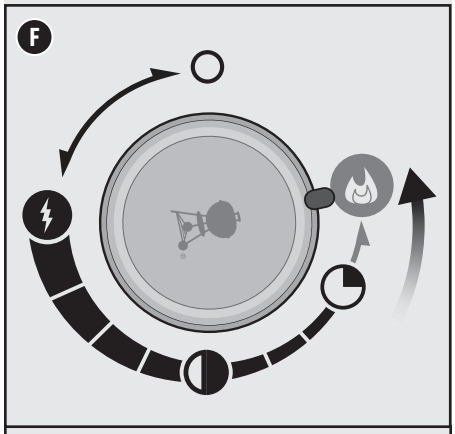

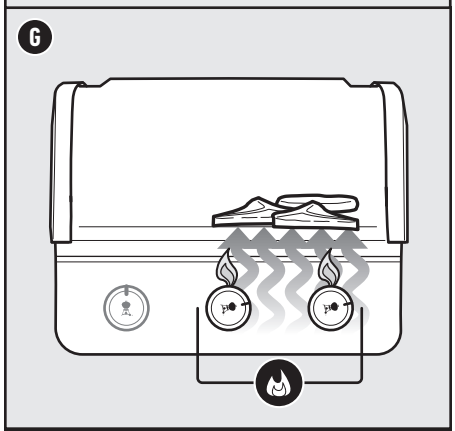

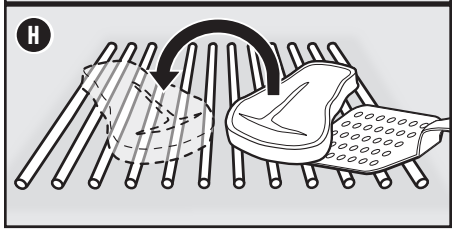

Igniting the Side Burner

Using the Snap Ignition to Ignite the Side Burner

This feature is only available on select models.

If one or more of the main burners on your grill are already lit and you would like to ignite the side burner, skip to step 3. If none of the main burners are lit and you are only using the side burner, start with step 1.

1) Check that the side burner control knob is in the off ○ position. Check by pushing in and turning knob clockwise **(A)**. Also check that all main burner control knobs are in the off ○ position.
   Note: It is important that all burner control knobs are in the off ○ position before turning on the LP tank. If they are not, the flow limiting device built into the regulator will activate, limiting the flow of gas from the LP tank.
2) Turn the LP tank on by slowly turning the tank valve counterclockwise; wait 60 seconds.
   Note: It is important that the LP tank is turned on slowly. If it is opened too quickly, the flow limiting device built into the regulator will activate, limiting the flow of gas from the LP tank.
3) Open the side burner lid **(B)**.
4) Push the burner control knob in **(C)** and turn it counterclockwise to the start/high position until you hear it snap. Continue to hold the control knob in for two seconds after you hear the snap. This action will spark the igniter and light the burner.
5) Check that the side burner is lit. The side burner flame may be difficult to see on a bright sunny day.
6) If the burner does not ignite with the first snap of the the ignition, turn burner control knob to the off ○ position and repeat the lighting procedure a second time.
   If the burner still does not light within 4 seconds, turn the burner control knob to the off ○ position and wait five minutes to let the gas clear before you try again or try to light with a match.
7) Once side burner is ignited, continue turning the knob counterclockwise until you reach the desired position.
8) If the side burner does not ignite within 4 seconds, turn side burner control knob to the off ○ position and wait five minutes to allow the gas to clear before attempting to light the burner again.

Should the side burner fail to ignite using the snap ignition, refer to the TROUBLESHOOTING section. There you will find instructions on igniting the side burner with a match to help determine the exact problem.

To Extinguish Side Burner

1) Push side burner control knob in and then turn clockwise all the way to the off ○ position.
2) Turn gas supply off at the LP tank.

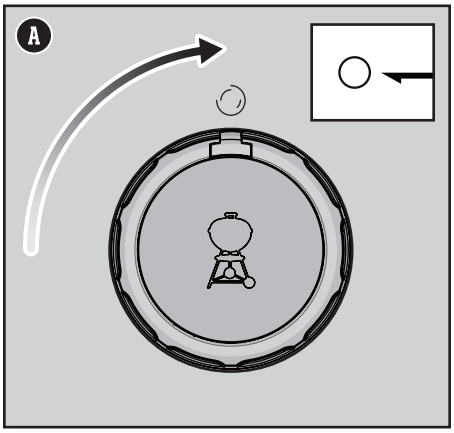

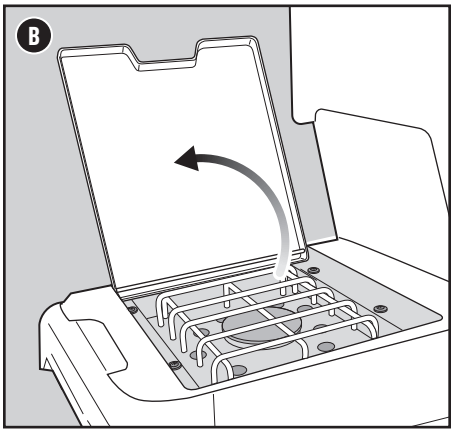

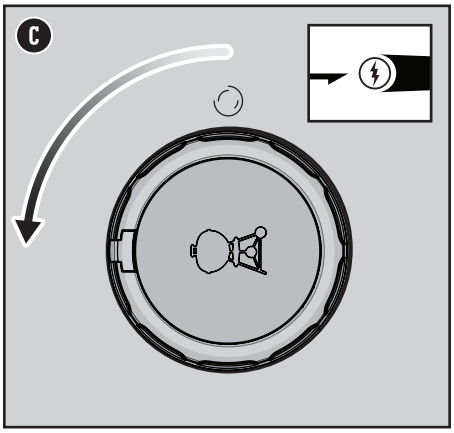

⚠ WARNING: Open side burner lid during ignition.

⚠ WARNING: Do not lean over side burner while igniting or cooking.

⚠ WARNING: If ignition does not occur within four seconds of attempting to light the side burner, turn the burner control knob to the off position. Wait five minutes to allow accumulated gas to dissipate, and then repeat the lighting procedure.

SPIRIT FEATURES

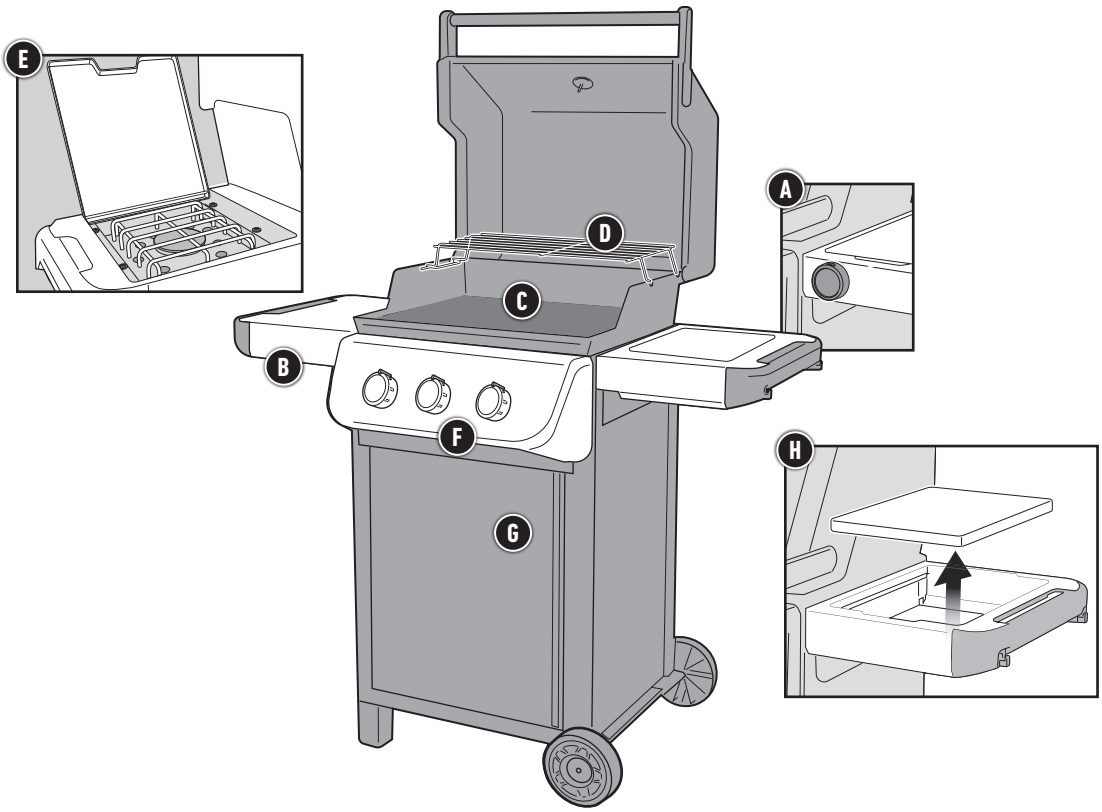

Complete List of Features

The features listed below are only available on select models.

A Digital Temperature Display

The digital temperature display gives you a convenient way to check the surface temperature of your grill.

B Side Tables

Use the side tables to keep platters, seasonings, and tools within arm's reach. Hang your essential grilling tools on the hooks for easy access and organization of your backyard workspace.

C WEBER CRAFTED Outdoor Kitchen Collection Cooking Grates

Your grill is Outdoor Kitchen Collection ready with the included cooking grates. Additional Outdoor Kitchen Collection accessories sold seperately.

D Warming Rack

Keeps food warm, or toasts buns, while the main course finishes grilling on the grate.

E Side Burner

Use the side burner to simmer BBQ sauce or sauté veggies while the main course grills under the lid.

F Sear zone

The sear zone is designed to create an intense heat zone to quickly add sear marks to your meat.

G Grill Cabinet

The grill cabinet adds enclosed storage space for all of your essential grilling tools and accessories.

H WEBER WORKS Prep, Cook, and Store System

This grill is compatible with the WEBER WORKS Prep, Cook, and Store System. Add a variety of accessories (sold separately) that keep supplies handy, transport things from the kitchen, convert the side table into a prep station, stow away gear, and more.

The barbecues that are illustrated in this Owner's Manual may vary slightly from the model purchased.

The Flame - Direct or Indirect

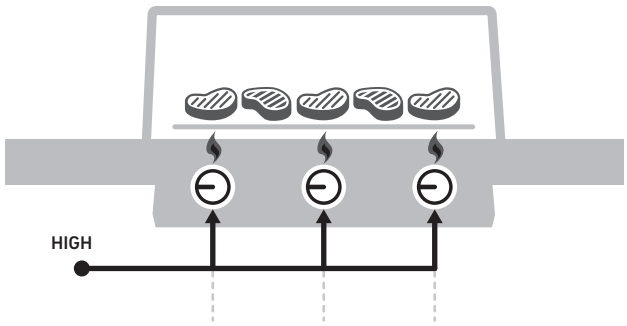

DIRECT HEAT SETUP

Use the direct method for small, tender pieces of food that take less than 20 minutes to cook, such as: hamburgers, steaks, chops, kabobs, boneless chicken pieces, fish fillets, shellfish, and sliced vegetables.

With direct heat, the fire is right below the food. It sears the surfaces of the food, developing flavors, texture, and delicious caramelization while cooking the food all the way to the center.

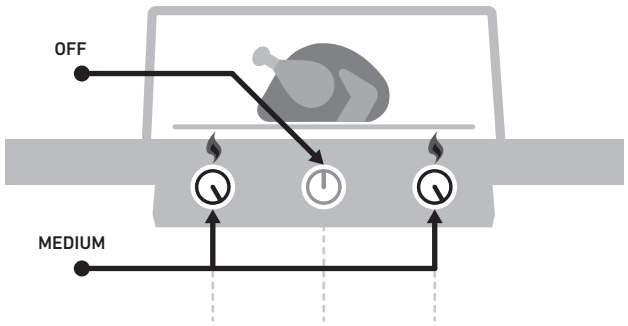

INDIRECT HEAT SETUP

Use the indirect method for larger cuts of meat that require 20 minutes or more of grilling time, or for foods so delicate that direct exposure to the heat would dry them out or scorch them, such as: roasts, bone-in poultry pieces, whole fish, delicate fish fillets, whole chickens, turkeys, and ribs. Indirect heat can also be used for finishing thicker foods or bone-in cuts that have been seared or browned first over direct heat.

With indirect heat, the heat is on both sides of the grill, or off to one side of the grill. The food sits over the unlit part on the cooking grate.

Grilling Do's and Don'ts

Preheat each and every time.

If the cooking grates aren't hot enough, food will stick, and you will likely never have a chance of searing properly or developing those handsome grill marks. Even if a recipe calls for medium or low heat, always preheat the grill on the highest setting first. Open the lid, turn up the heat, close the lid, and then let the cooking grate heat up for 15 minutes on high.

Don't grill on dirty grates.

Tossing food onto the cooking grates before they have been cleaned is never a good idea. Leftover "stuff" on the grates acts like glue, binding it to the grates and your new food. To avoid tasting last night's dinner on today's lunch, make sure you are grilling on a clean cooking grate. Once the grates are preheated, use a stainless steel bristle grill brush to make a clean, smooth surface.

Be present in the process.

Before firing up your grill, make sure that everything you need is within arm's reach. Don't forget your essential grilling tools, already oiled and seasoned food, glazes or sauces, and clean cooking platters for cooked food. Having to run back to your kitchen not only means missing out on the fun, but could also result in burning your food. French chefs call this "mise en place" (meaning, "put in place"). We call it "being present".

Create a little elbow room.

Packing too much food onto the cooking grates restricts your flexibility. Leave at least one-quarter of the cooking grates clear, with plenty of space between each food item, in order to get your tongs in there and easily move the food around. Sometimes grilling involves split-second decisions and the ability to jockey food from one area to another. So give yourself enough room to operate.

Try not to peek.

The lid on your grill is for more than just keeping the rain out. Most importantly, it's for preventing too much air from getting in, and too much heat and smoke from getting out. When the lid is closed, the cooking grates are hotter, the grilling times are faster, the smoky tastes are stronger, and the flare-ups are fewer. So put a lid on it!

Only flip once.

What's better than a juicy steak with a deep sear and plenty of beautifully caramelized bits? The key to accomplishing these results is to keep your food in place. Sometimes we have the tendency to flip our food before it reaches the desirable level of color and flavor. In nearly all cases, you should turn food just once. If fiddling with it more than that, you are probably also opening the lid too much, which causes its own set of problems. So step back and trust the grill.

Know when to tame the flame.

When grilling, sometimes the most important thing to know is when to stop. The most reliable way to test doneness of your food is to invest in an instant-read thermometer. This slim little gem will help you pinpoint that critical moment when your food is at its best.

Don't be afraid to experiment.

Back in the 1950s, grilling meant one thing: meat (and only meat) charred over open flames. The modern day backyard chef doesn't need a kitchen in order to prepare a full course meal. Use your grill to make char-grilled appetizers, sides, and even desserts. Register your grill to receive special content that will inspire you along the way. We'd love to join you on your grilling adventures.

Cleaning and Maintenance

Cleaning the Inside of the Grill

Over time, the performance of your grill can diminish if it has not been maintained properly. Low temperatures, uneven heat, and food sticking to cooking grates are all signs that cleaning and maintenance are overdue. When your grill is off and cool, start by cleaning the inside, from the top down. A thorough cleaning is recommended at least twice a year. Consistent use may require quarterly cleanings.

Cleaning the Lid

From time to time you may notice "paint-like" flakes on the inside of the lid. During use, grease and smoke vapors slowly change into carbon and deposit on the inside of your lid. These deposits will eventually peel, and looks very similar to paint. These deposits are non-toxic, but the flakes could fall onto your food if you do not clean the lid regularly.

1) Brush the carbonized grease from the inside of the lid with a stainless steel bristle grill brush **(A)**. To minimize further build-up, the inside of the lid can be wiped with a paper towel after grilling while the grill is still warm (not hot).

Cleaning the Cooking Grates

Cleaned grates will prevent your next meal from sticking. If you are cleaning your cooking grates regularly, the debris on your grates will be minimal.

1) With grates installed, brush the debris off your cooking grate with a stainless steel bristle grill brush **(B)**.
2) Take the grates out and set aside.

Cleaning the FLAVORIZER BARS

FLAVORIZER BARS catch drippings that smoke and sizzle, adding flavor to your food. Any drippings that are not vaporized by the FLAVORIZER BARS are funneled away from the burners. This helps prevent flare-ups inside of your grill, and protects the burners from getting clogged.

1) Scrape the FLAVORIZER BARS with a plastic scraper **(C)**.
2) If necessary, brush the FLAVORIZER BARS with a stainless steel bristle grill brush.
3) Remove FLAVORIZER BARS and set aside.

Cleaning the Burners

Two areas on the burners that are key to optimum performance are the ports (small raised openings running along the length of the burners) and the spider/insect screens on the ends of the burner. Keeping these areas clean is essential for safe operation.

Cleaning the Burner Ports

1) Use a clean stainless steel bristle grill brush to clean the outside of the burners by brushing across the top of the burner ports **(D)**.
2) When cleaning the burners, avoid damaging the ignition electrode by carefully brushing around it.

Cleaning the Spider Screens

1) Locate the ends of the burners on the underside of the control panel where they meet the valves.
2) Clean the spider/insect screens on each of the burners using a soft bristle brush **(E)**.

Cleaning the Heat Deflector

Located under the burners, the heat deflector distributes heat evenly throughout the cookbox while cooking. Keeping heat deflector clean will enhance the cooking performance of your grill.

1) Scrape the heat deflector with a plastic scraper.
2) If necessary, brush the heat deflector with a stainless steel bristle grill brush.
3) Remove heat deflector and set aside.

⚠ **After cleaning, make sure the heat deflector is in place correctly.**

Cleaning the Cookbox

Look inside the cookbox for any grease accumulation or leftover food particles. Excessive accumulation can cause a fire.

1) Use a plastic scraper to scrape debris off the sides and bottom of the grill into the opening in bottom of the cookbox. This opening leads debris into the slide-out grease tray.

Cleaning the Grease Management System

The grease management system consists of an angled slide-out grease tray and a catch pan. These components were designed to be easily removed, cleaned, and replaced; an essential step every time you prepare to grill.

Cleaning the Outside of the Grill

The outside of your grill may include stainless steel, porcelain-enameled, and plastic surfaces. WEBER recommends the following methods based on the surface type.

Cleaning Stainless Steel Surfaces

Clean stainless steel using a non-toxic, non-abrasive stainless steel cleaner or polish designed for use on outdoor products and grills. Use a microfiber cloth to clean in the direction of the grain of the stainless steel. Do not use paper towels.

Note: Do not risk scratching your stainless steel with abrasive pastes. Pastes do not clean or polish. They will change the color of the metal by removing the top chromium oxide film coating.

Cleaning Painted, Porcelain-Enameled Surfaces and Plastic Components

Clean painted, porcelain-enameled and plastic components with warm soapy water, and paper towels or cloth. After wiping down the surfaces, rinse and dry thoroughly.

Cleaning the Outside of Grills that are in Unique Environments

If your grill is subject to a particularly harsh environment, you will want to clean the outside more often. Acid rain, pool chemicals, and salt water can cause surface rusting to appear. Wipe down the outside of your grill with warm soapy water. Follow up with a rinse and thorough drying. Additionally, you may want to apply a stainless steel cleaner weekly to prevent surface rust.

Moving the Grill

Always check your internal components to ensure they are in place whenever you move your grill

1) **Heat deflector (F)**– Ensure it is fully inserted into the cookbox.
2) **Slide out grease tray (G)**– Accessed from the back of the grill, make sure it is pushed all the way in.

Cleaning Around the Electronic Components

Use a soft, damp cloth to wipe the interior of the cabinet and around the side tables. Be careful not to pull out any of the wire connections when cleaning around the electronic components

CAUTION: NEVER SPRAY THE BARBECUE WITH A STEADY WATER STREAM SUCH AS FROM A GARDEN HOSE OR POWER WASHER. ELECTRONIC COMPONENTS COULD BECOME DAMAGED.

⚠ **WARNING: Turn your grill off and wait for it to cool before thoroughly cleaning.**

⚠ **WARNING: Over time, the development of rough surfaces can form on the FLAVORIZER BARS. Wearing gloves is recommended when handling. Do not clean FLAVORIZER BARS or cooking grates in a sink, dishwasher, or self-cleaning oven.**

⚠ **WARNING: When cleaning the burners, never use a brush that has already been used to clean the cooking grates. Never put sharp objects into the burner port holes.**

⚠ **CAUTION: Do not place any grill components onto the side tables as they may scratch the paint or stainless steel surfaces.**

⚠ **CAUTION: Do not use any of the following to clean your grill: abrasive stainless steel polishes or paints, cleaners that contain acid, mineral spirits or xylene, oven cleaner, abrasive cleansers (kitchen cleansers), or abrasive cleaning pads.**

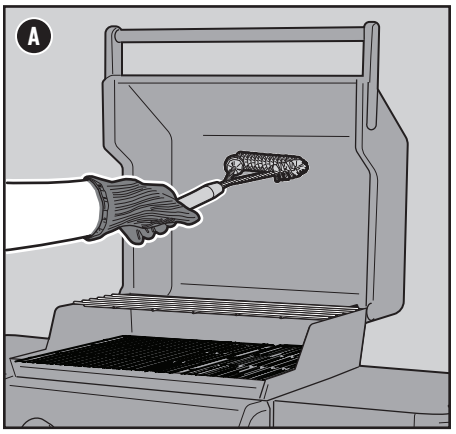

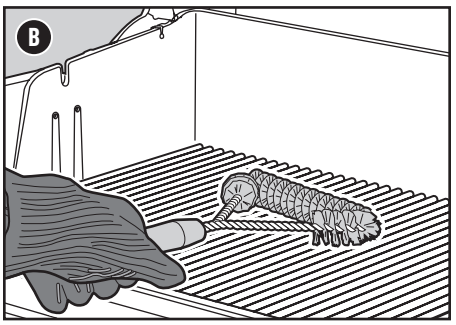

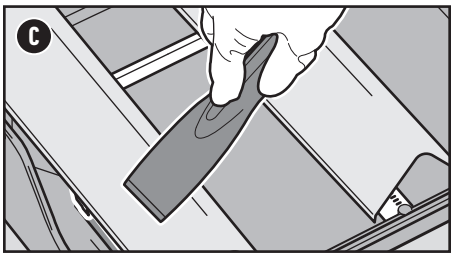

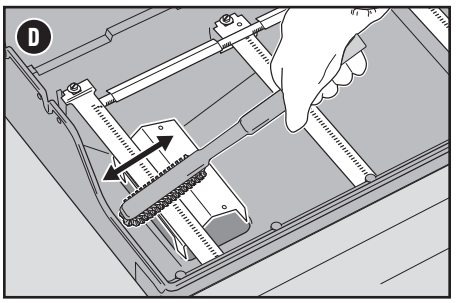

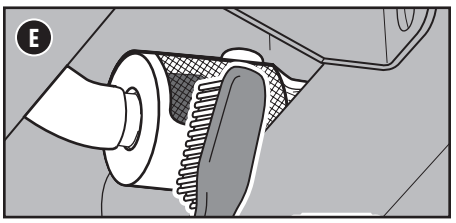

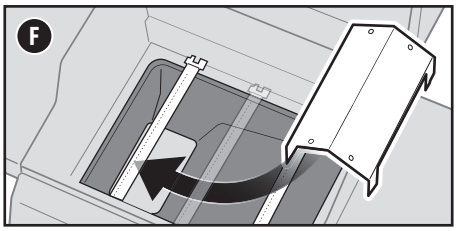

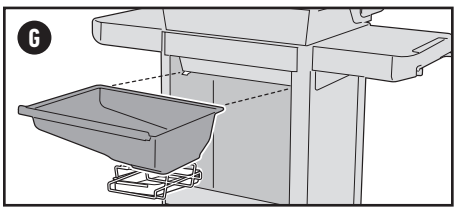

MAIN BURNER(S) or SIDE BURNER WILL NOT IGNITE

SYMPTOM

• Main burners or side burner do(es) not ignite when following the instructions in the “Operation” section of this owner's manual.

CAUSE	SOLUTION
There is a problem with gas flow.	If any burner does not ignite, the first step is to determine if there is gas flowing to the burner(s). To check this, follow the instructions below for “Lighting Your Grill with a Match.” If **match lighting IS NOT successful**, follow the instructions for disconnecting and reconnecting the LP tank..
There is a problem with the ignition system.	If any burner does not ignite, the first step is to determine if there is gas flowing to the burner(s). To check this, follow the instructions below for “Lighting Your Grill with a Match.” If **match lighting IS successful**, contact customer service about checking the ignition system.

Lighting Your Grill with a Match

Using a Match to Determine if there is Gas Flow to the Main Burners

1) Open the grill lid.
2) Check that all burner control knobs (including side burner control knob) are in the off ○ position. Check by pushing in and turning knobs clockwise.
   Note: It is important that all burner control knobs are in the off ○ position before turning on the LP tank. If they are not, the flow limiting device built into the regulator will activate, limiting the flow of gas from the LP tank.
3) Turn the LP tank on by slowly turning the tank valve counterclockwise; wait 60 seconds.
   Note: It is important that the LP tank is turned on slowly. If it is opened too quickly, the flow limiting device built into the regulator will activate, limiting the flow of gas from the LP tank.
4) Begin with the burner furthest to the left. Put match in the matchstick holder and strike match. (Matchstick holder is located under left side table.) Insert lit match down through the cooking grates, past the FLAVORIZER bars and next to the burner **(A)**.
5) Push the burner control knob in and slowly turn it counterclockwise toward the start/high ⚡ position.
6) Check that the burner is lit by looking through the cooking grates and through the cutout in the FLAVORIZER bar.
7) If the burner does not ignite within 4 seconds, turn burner control knob to the off ○ position and wait five minutes to allow the gas to clear before attempting to light the burner again.
8) If the burner ignites, the problem lies in the ignition system. Contact WEBER customer service about checking the ignition system.
9) Replace the matchstick holder by hanging underneath left side table **(B)**.

Using a Match to Determine if there is Gas Flow to the Side Burner

This feature is only available on select models.

1) Open the side burner lid.
2) Check that the side burner control knob is in the off ○ position. Check by pushing in and turning knob clockwise. Also check that all main burner control knobs are in the off ○ position.
   Note: It is important that all burner control knobs are in the off ○ position before turning on the LP tank. If they are not, the flow limiting device built into the regulator will activate, limiting the flow of gas from the LP tank.
3) Turn the LP tank on by slowly turning the tank valve counterclockwise; wait 60 seconds.
   Note: It is important that the LP tank is turned on slowly. If it is opened too quickly, the flow limiting device built into the regulator will activate, limiting the flow of gas from the LP tank.
4) Put match in the matchstick holder and strike match. (Matchstick holder is located under left side table.) Hold lit match by the side burner **(C)**.
5) Push the side burner control knob in and slowly turn it counterclockwise toward the start/high ⚡ position.
6) Check that the side burner is lit. The side burner flame may be difficult to see on a bright sunny day.
7) If the side burner does not ignite within 4 seconds, turn side burner control knob to the off ○ position and wait five minutes to allow the gas to clear before attempting to light the burner again.
8) If the burner ignites, the problem lies in the ignition system. Contact WEBER customer service about checking the ignition system.

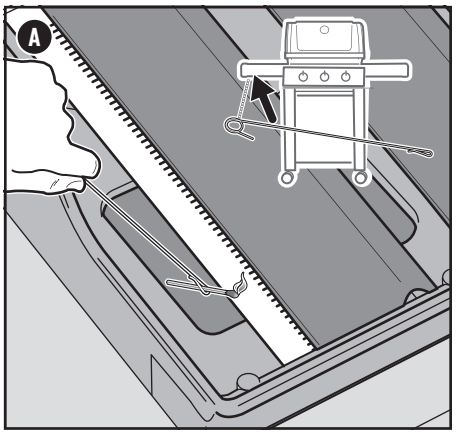

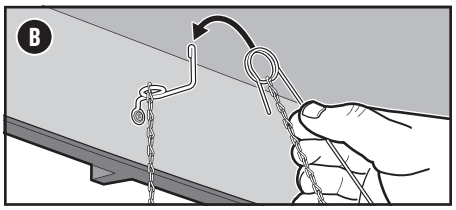

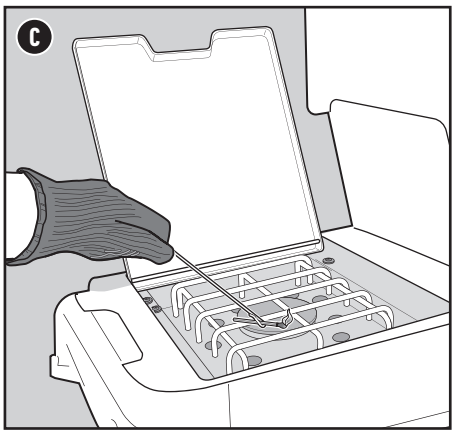

GAS FLOW

SYMPTOM

- Grill does not reach desired temperature or heats unevenly.
- One or more of the burners fail to ignite.
- Flame is low when burner is on high position.
- Flames do not run the whole length of the burner.
- Burner flame pattern is erratic.

CAUSE	SOLUTION
The "flow limiting device" has been activated. This safety feature built into the regulator restricts the gas flow in the event of a gas leak. You can inadvertently activate this safety feature without having a gas leak. This typically occurs when you turn on the gas at the LP tank and one or more of the control knobs are not in the off position. It may also occur if you turn on the LP tank too quickly.	Reset the "flow limiting device" by closing the LP tank valve and turning all the burner control knobs to the off ○ position. Wait five minutes to allow accumulated gas to dissipate, then ignite the grill again following the instructions in the "Operation" section.
The LP tank is low or empty.	Refill LP tank.
Fuel hose is bent or kinked.	Straighten fuel hose.
Burner ports are dirty.	Clean burner ports. Refer to "Cleaning the Burner Ports."

SYMPTOM

- Gas is smelled in conjunction with burner flames that appear yellow and lazy.

CAUSE	SOLUTION
Spider screens on the burners are obstructed.	Clean spider screens. Refer to "Cleaning the Spider Screens" in the Product Care section. Also refer to the illustrations and information in this section about proper flame pattern and spider screens.

SYMPTOM

- The smell of gas and/or a light hissing sound.

CAUSE	SOLUTION
The internal rubber seal in the LP tank valve could be damaged.	Extinguish any open flame. Shut off gas to the appliance (grill). Inspect the rubber seal for damage. If damaged, return tank to place of purchase.
Connection between regulator and LP tank could be incomplete.	Extinguish any open flame. Shut off gas to the appliance (grill). Refer to LP TANK INSTALLATION & LEAK CHECKING section of your owner's manual.

GREASY GRILL (Resembles Peeling Paint & Flare-Ups)

SYMPTOM

- Inside of lid appears to have what resembles peeling paint.

CAUSE	SOLUTION
The flakes you see are accumulated cooking vapors that have turned into carbon, and NOT paint.	This happens over time after repeated use of your grill. This is not a defect. Clean the lid. Refer to the "Product Care" section.

SYMPTOM

- Experiencing flare-ups when grilling or preheating.

CAUSE	SOLUTION
There is leftover food from the previous meal.	Always preheat the grill on the highest setting for 10 to 15 minutes.
The inside of the grill needs to be cleaned thoroughly.	Follow the steps in the "Cleaning and Maintenance" section to clean the grill inside from the top down.

Proper Burner Flame Pattern

The burners in your grill were factory set for the correct air and gas mixture. When the burners are performing correctly, you will see a specific flame pattern. The tips may occasionally flicker yellow **(A)**, with a descending light blue **(B)** to dark blue flame **(C)**.

⚠ **WARNING: Blocked and dirty ports can restrict full gas flow, resulting in a fire (D) in and around the gas valves, causing serious damage to your grill.**

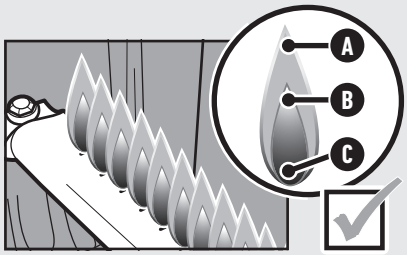

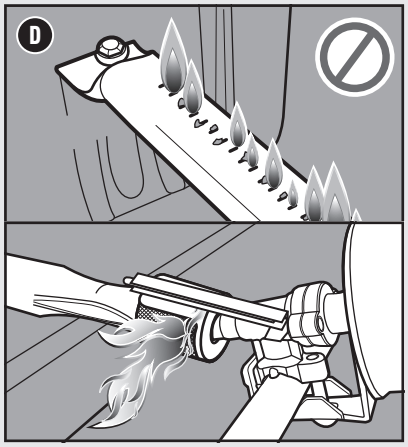

Spider Screens

The combustion air openings of the burners **(E)** are fitted with stainless steel screens to prevent spiders and other insects from spinning webs and building nests inside the burners. Additionally, dust and debris can accumulate on the outside of the spider/insect screen and obstruct the oxygen flow to the burners.

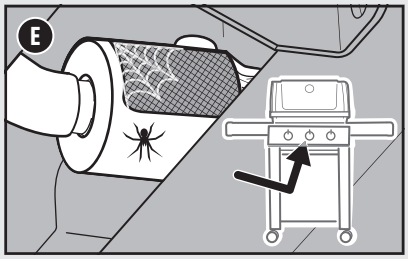

⚠ **WARNING: Do not attempt to make any repair to gas carrying, gas burning, ignition components or structural components without contacting Weber-Stephen Products LLC, Customer Service Department.**

⚠ **CAUTION: The burner tube openings must be positioned properly over the valve orifices.**

REPLACEMENT PARTS

To obtain replacement parts, contact the local retailer in your area or log onto weber.com.

SPIRIT E-210

Spirit - E-210 LP - US 110124

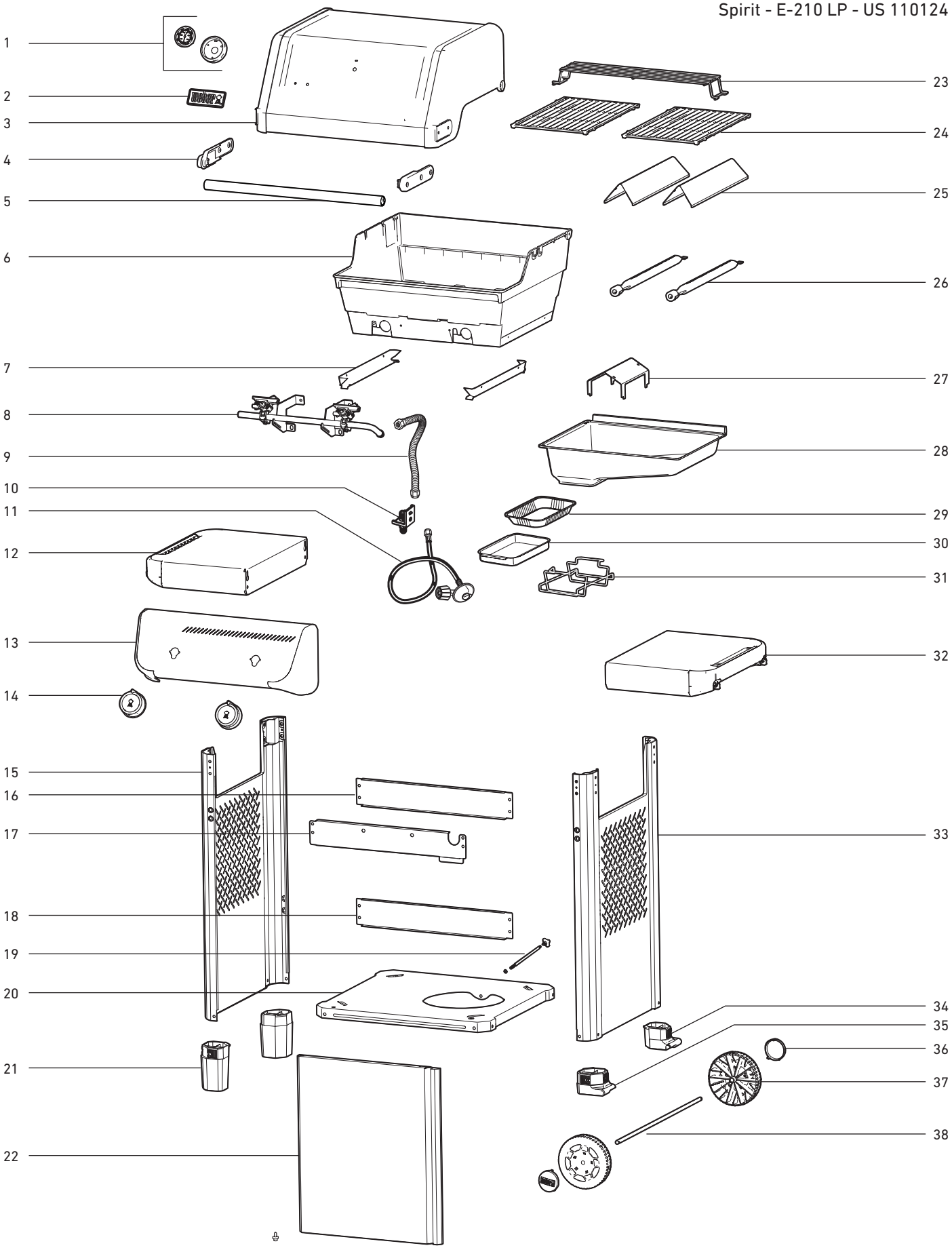

Spirit - E-310 LP - US 110124

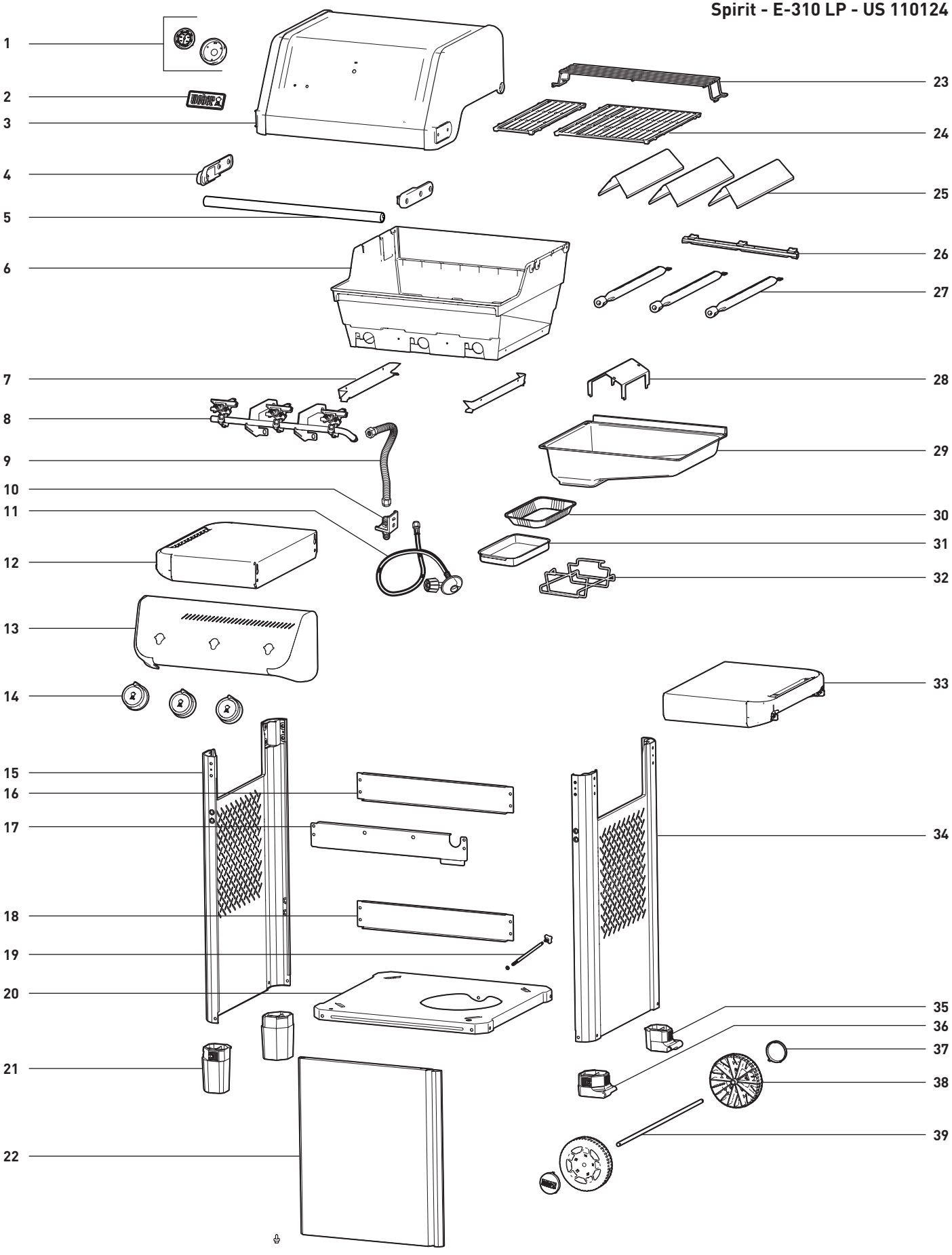

SPIRIT E-325

Spirit - E-325 LP - US110124

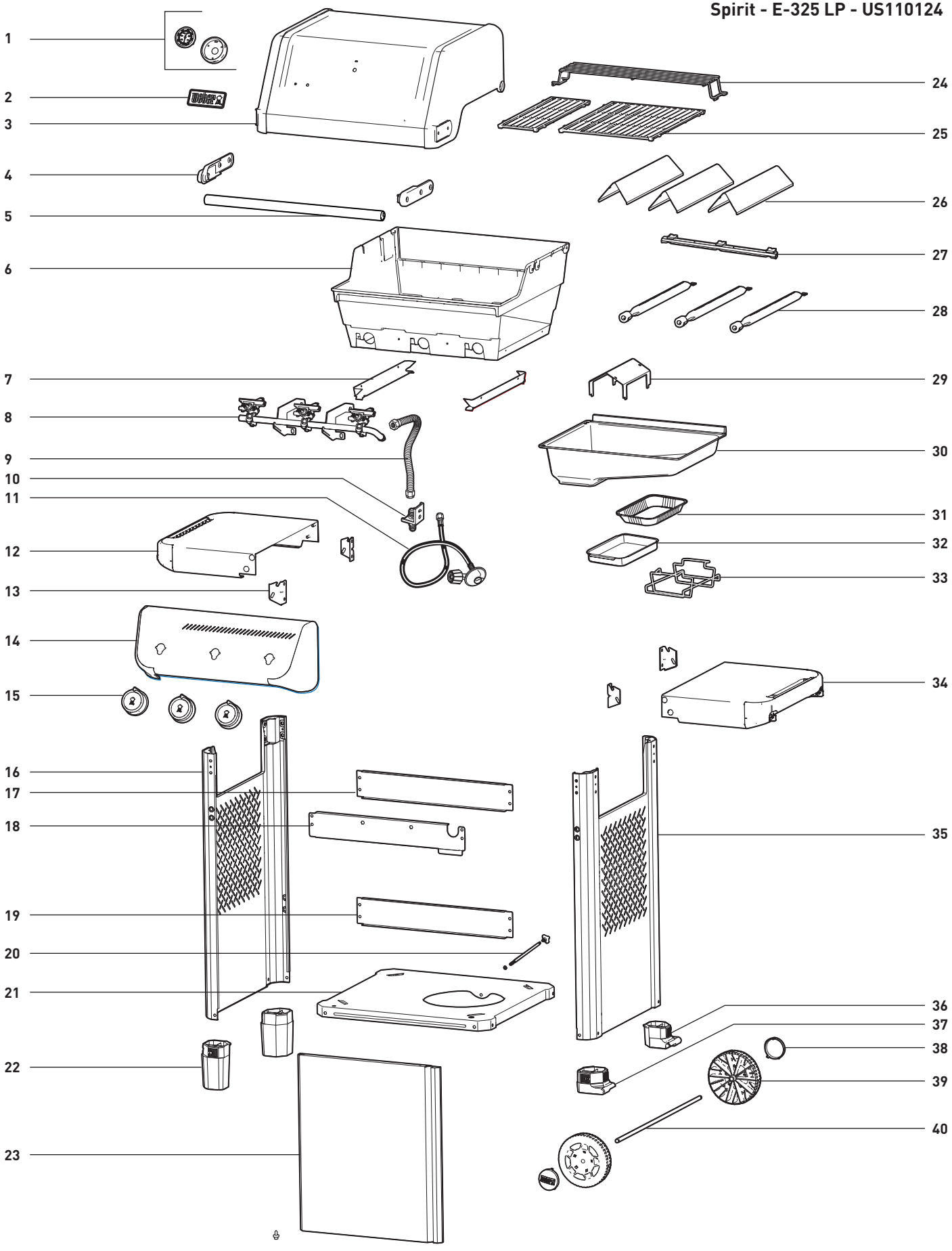

Spirit - E/S-425 LP - US 110124

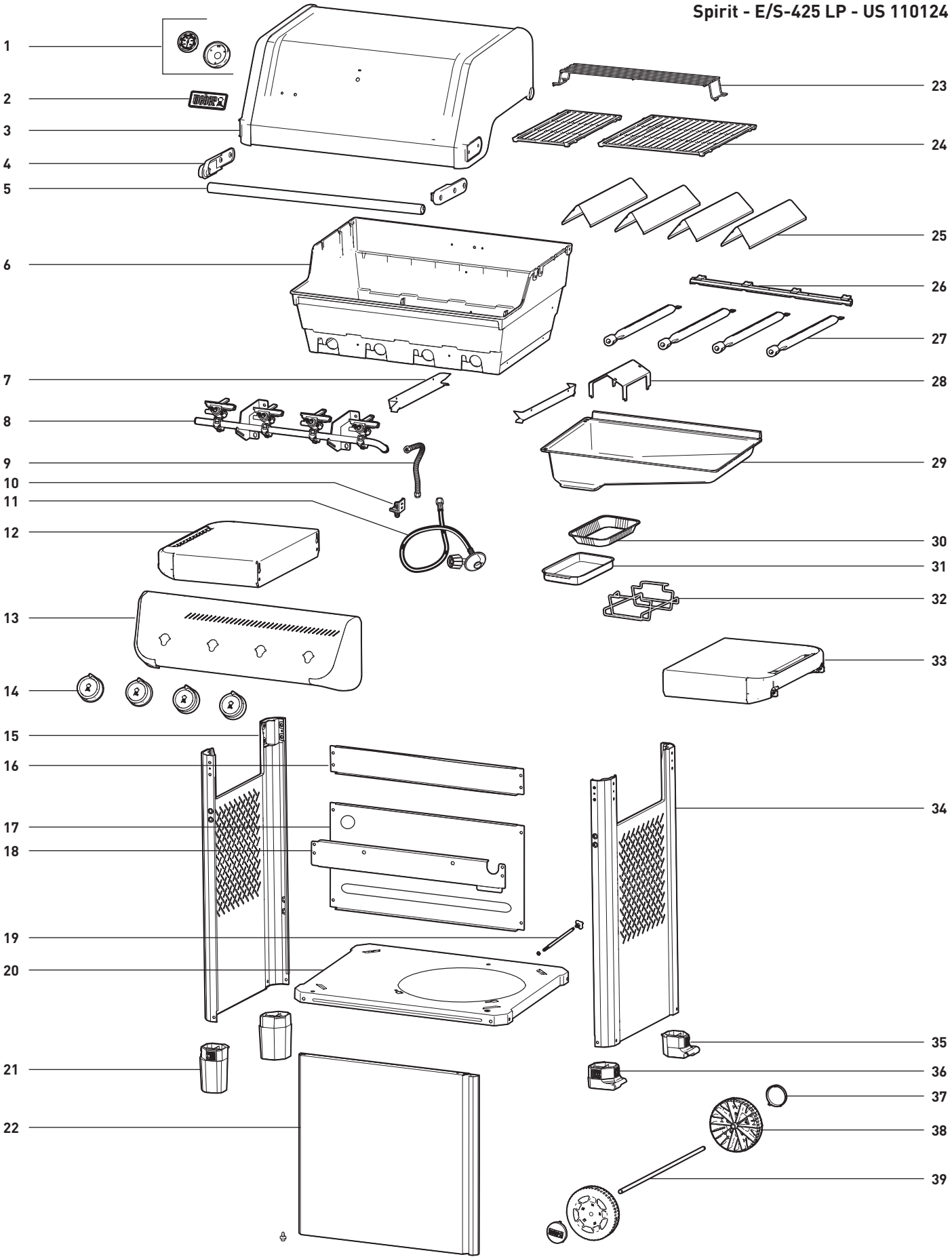

SPIRIT S-425

Spirit - E/S-425 LP - US 110124

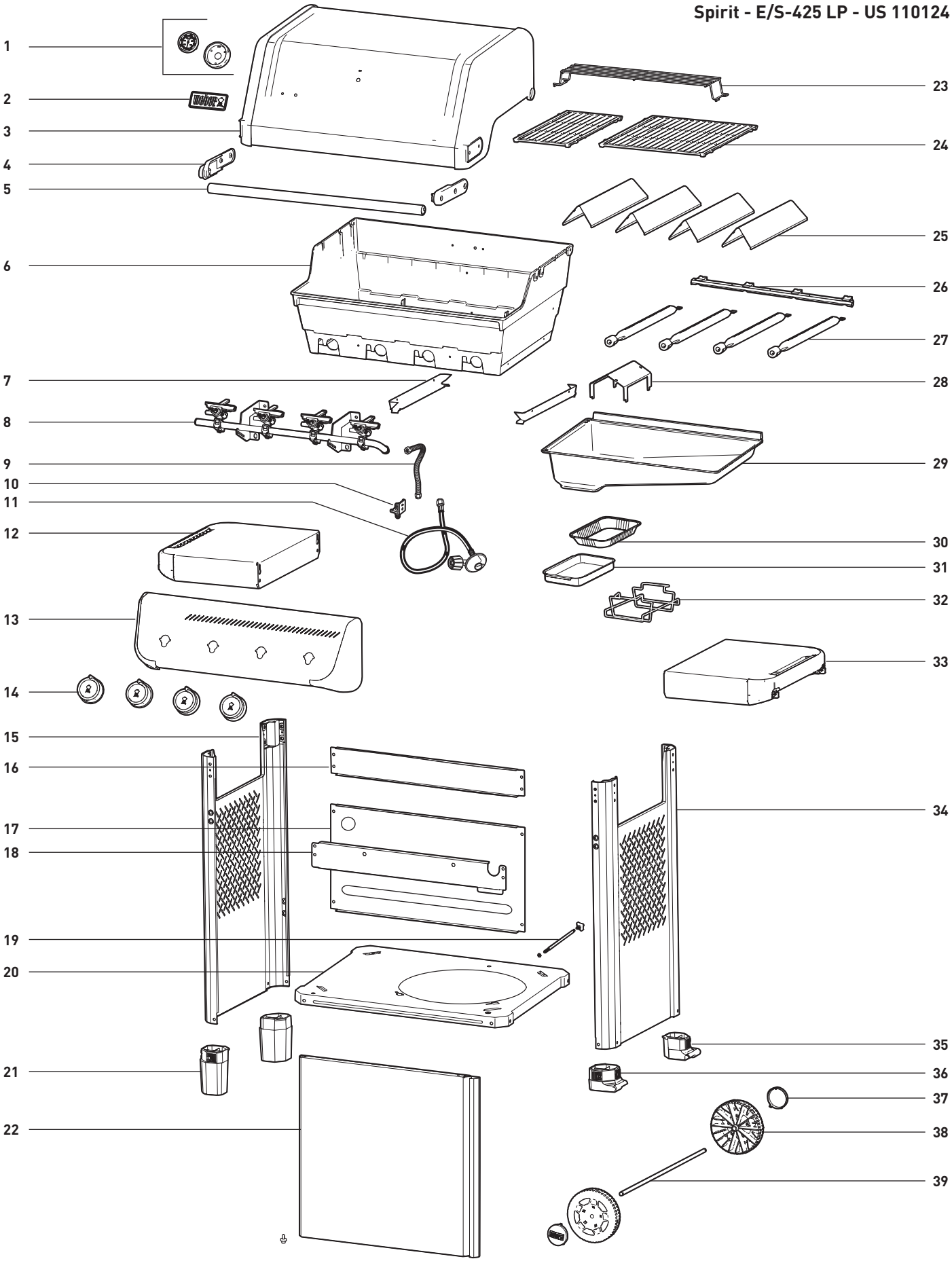

Spirit - E-435 LP - US 110124

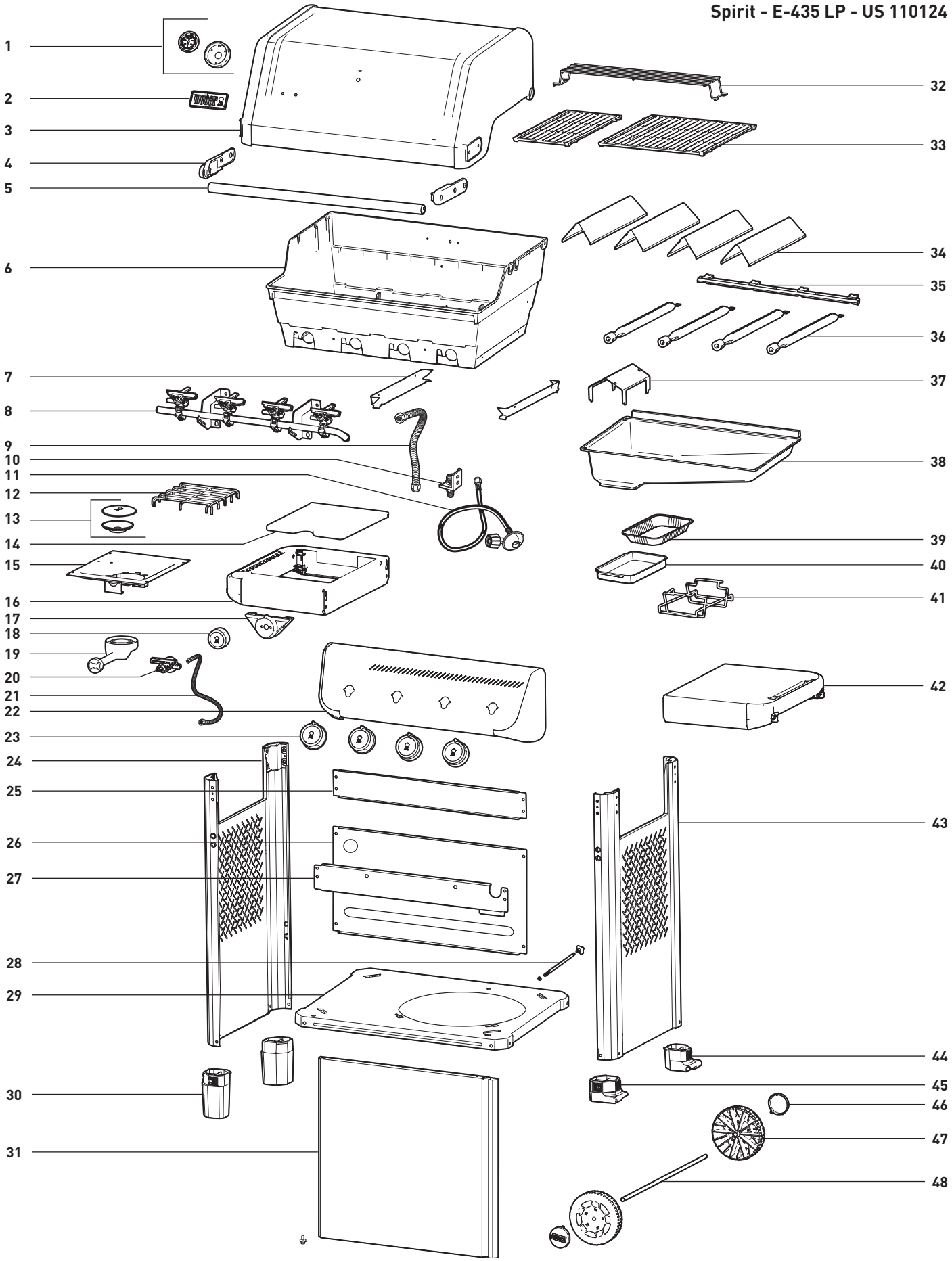

SPIRIT SB-E-425

Spirit - SB-E-425 LP - US 110124

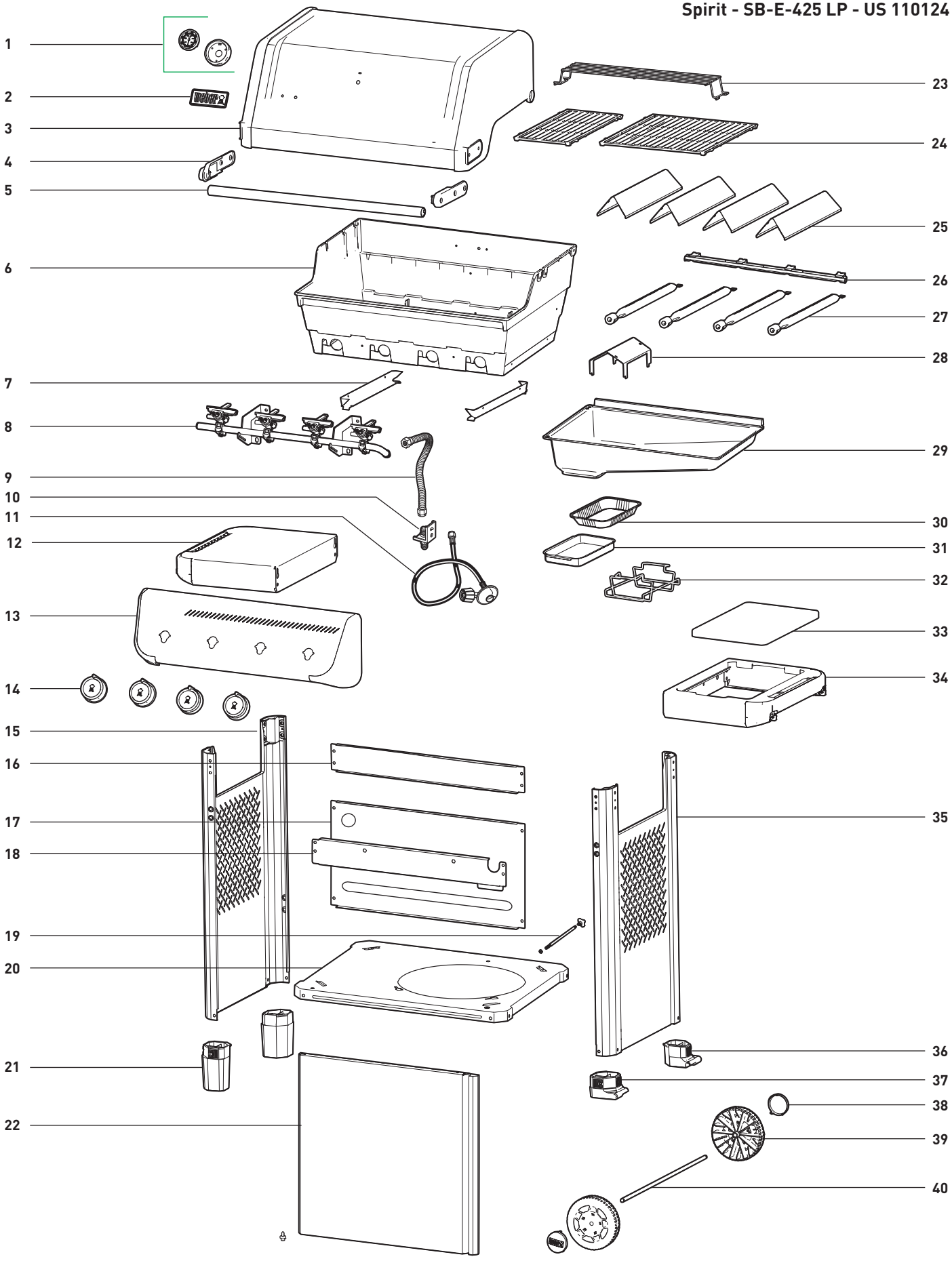

Spirit - SC-E-425 LP - US 110124

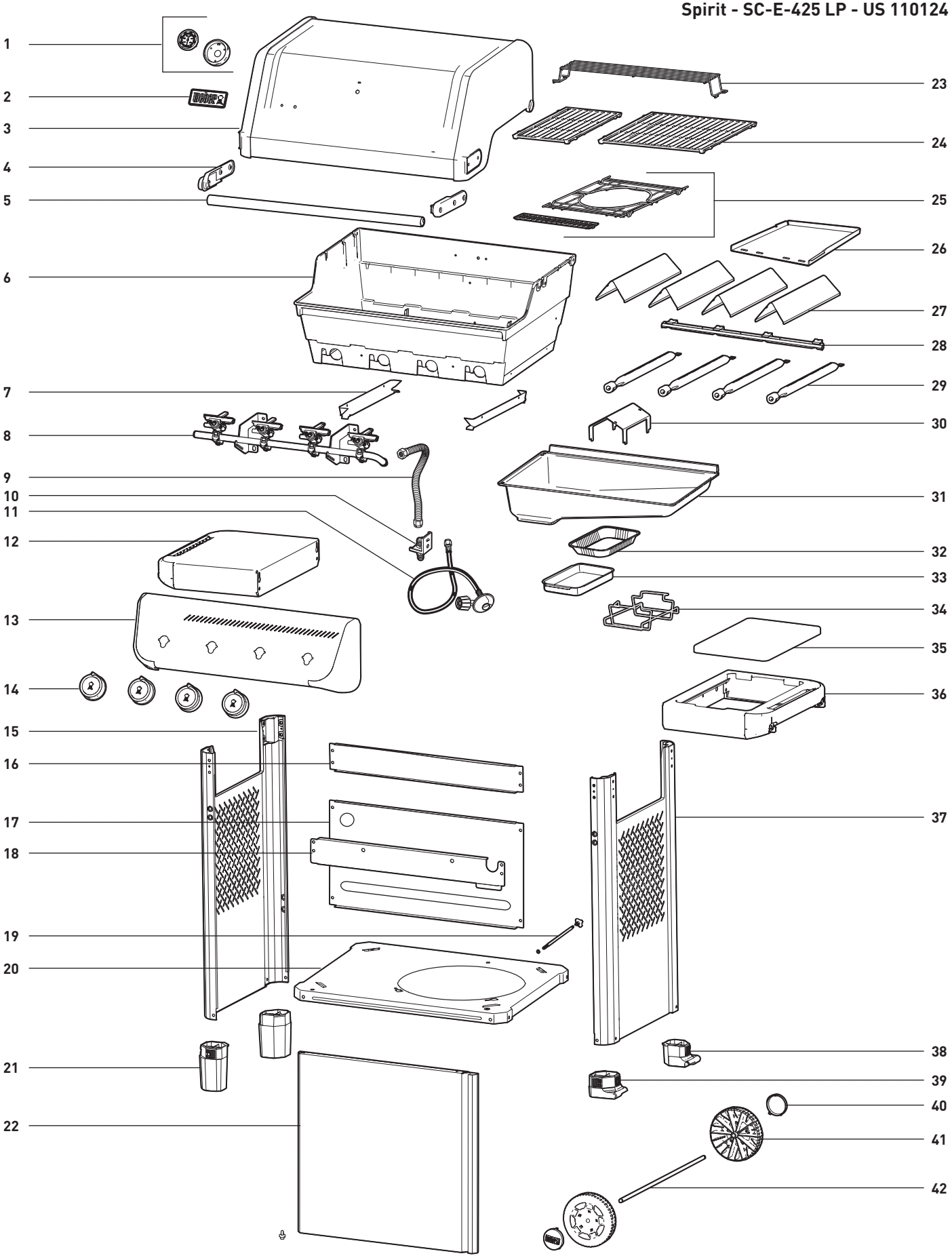

SPIRIT EP-325

Spirit - EP-325 LP - US 110124

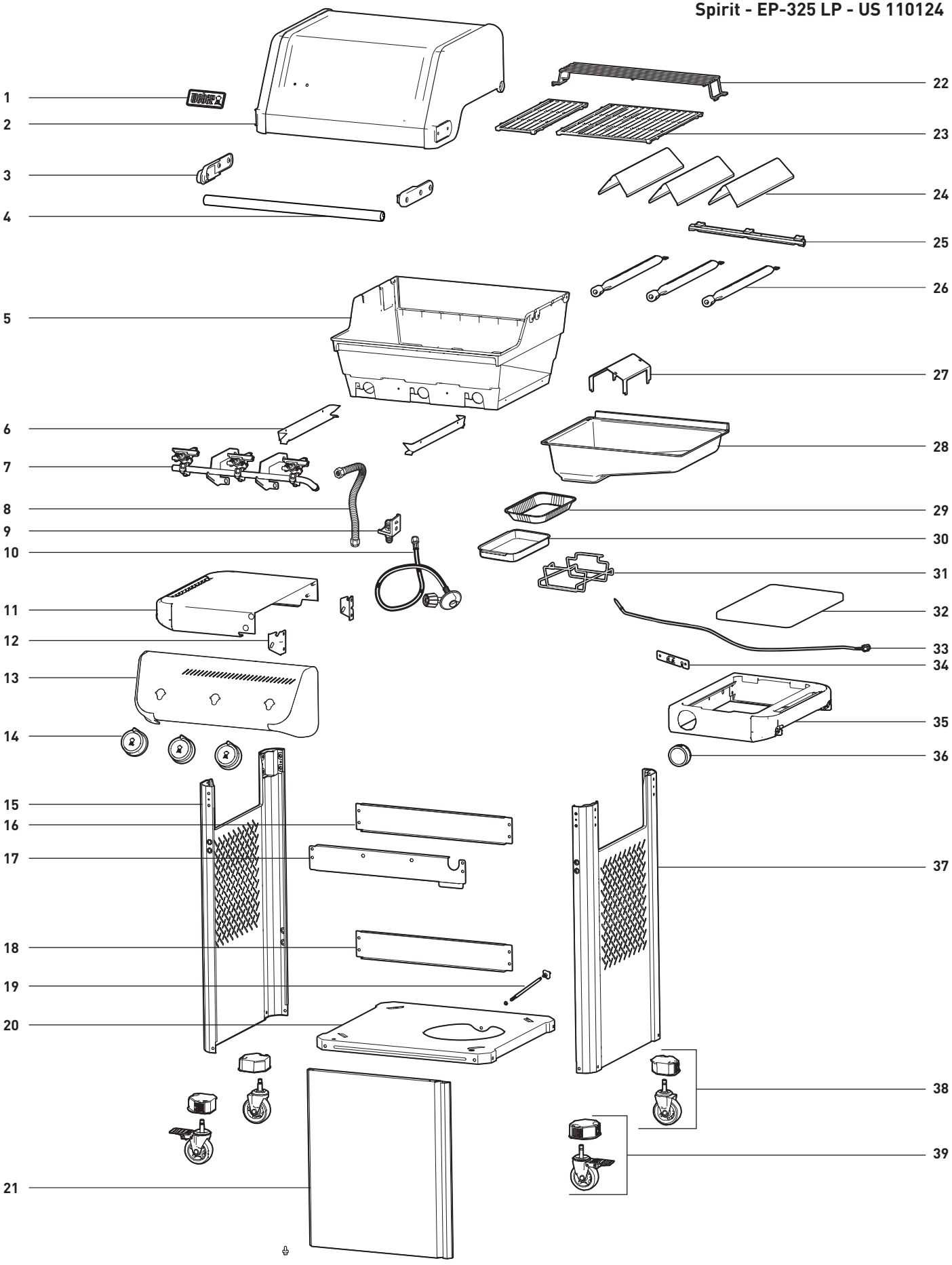

Spirit - EP-325 Stealth - LP - US 110124

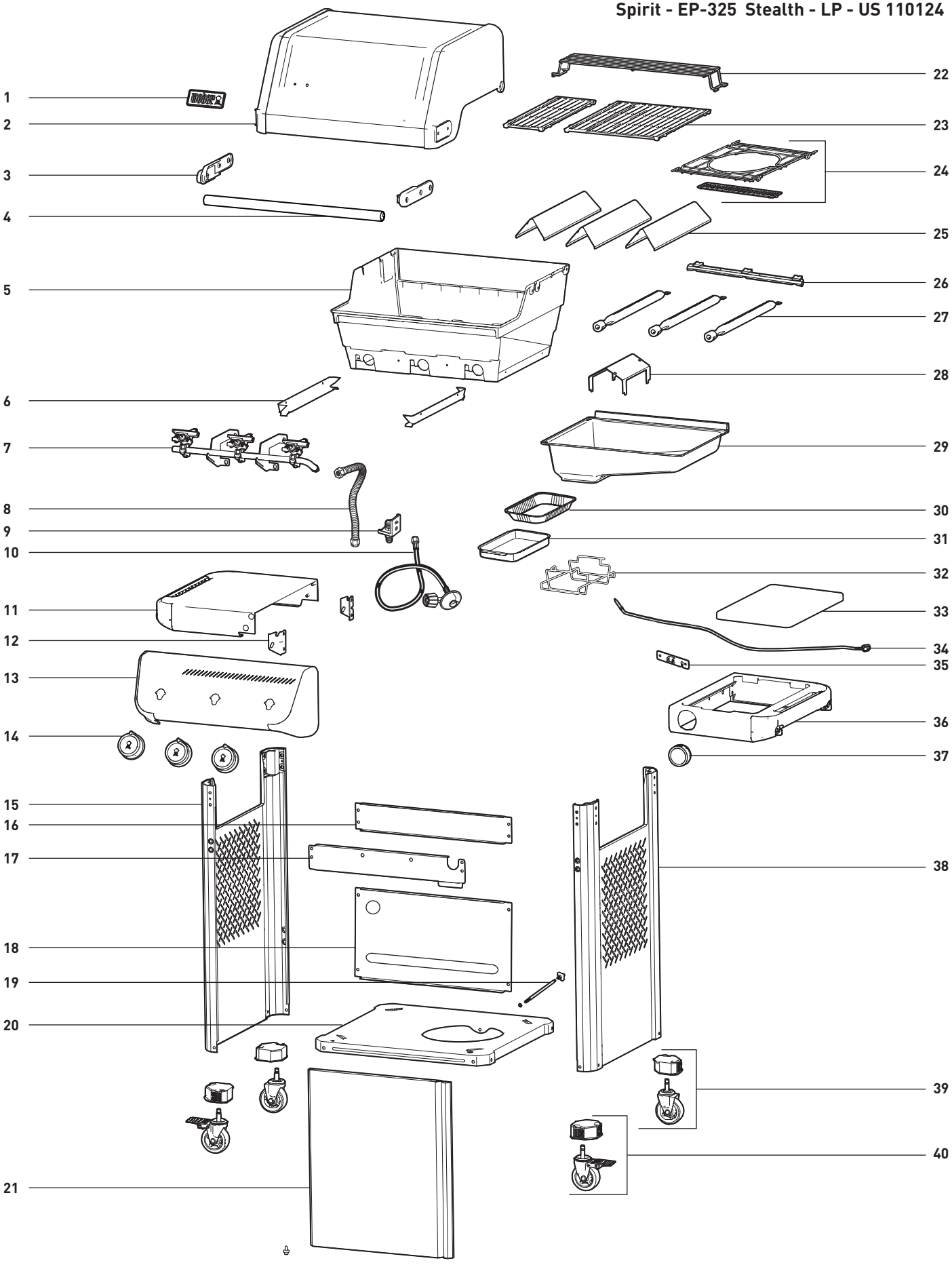

SPIRIT EP-425

Spirit - EP/SP-425 LP - US 110124

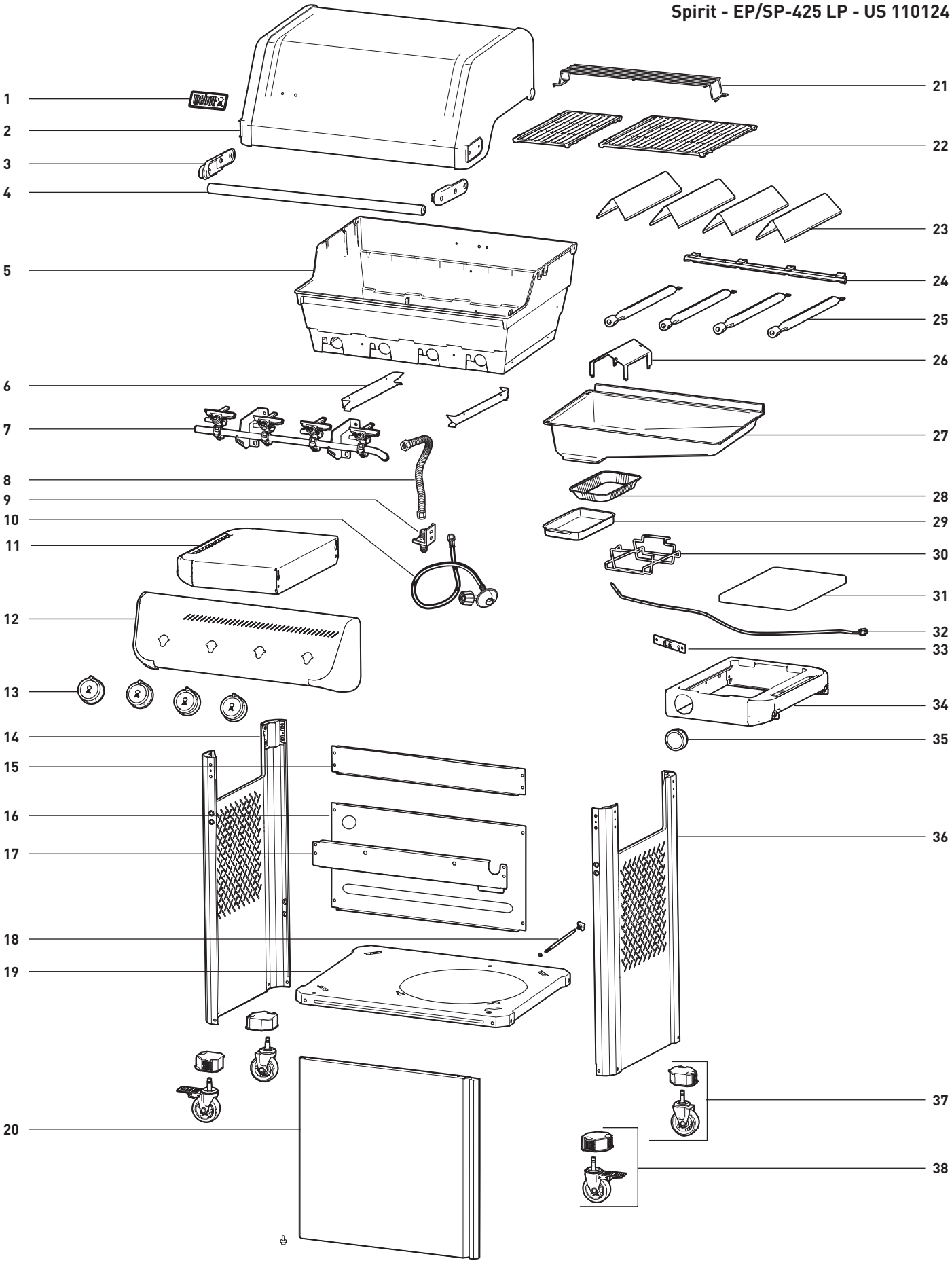

Spirit - EP-425 Stealth - LP - US 110124

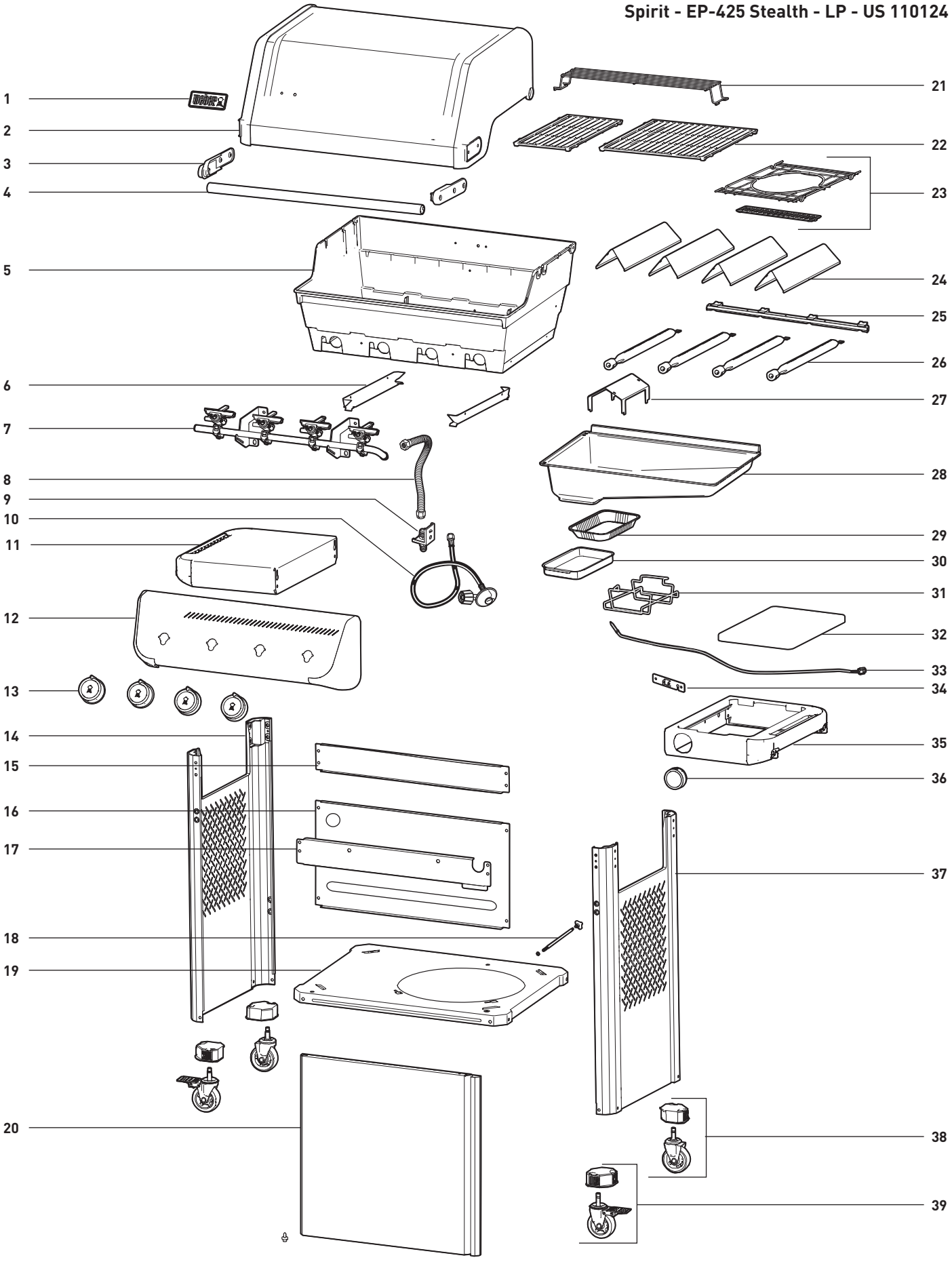

SPIRIT SP-425

Spirit - EP/SP-425 LP - US 110124

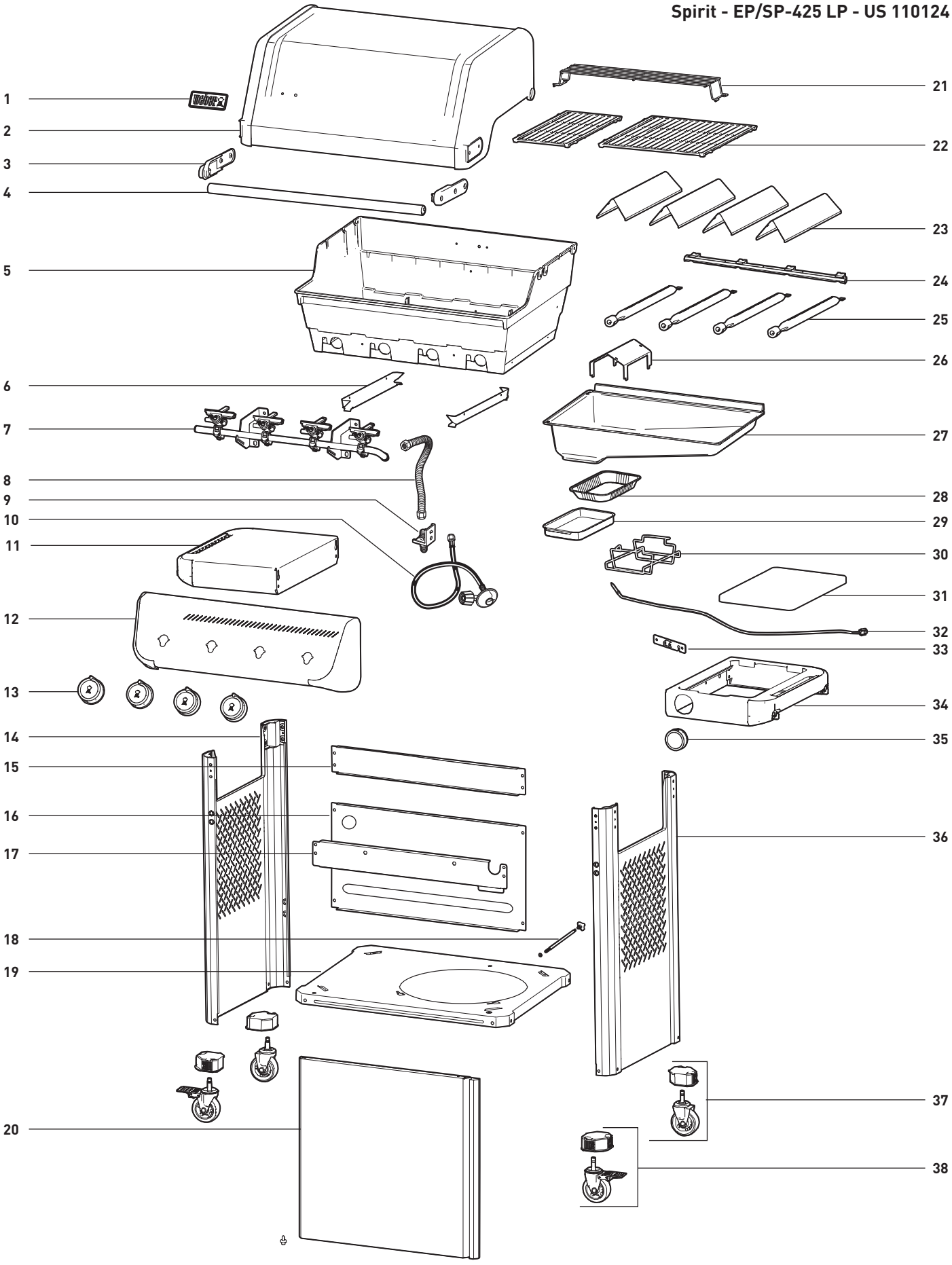

Spirit - EP/SP-435 LP - US 110124

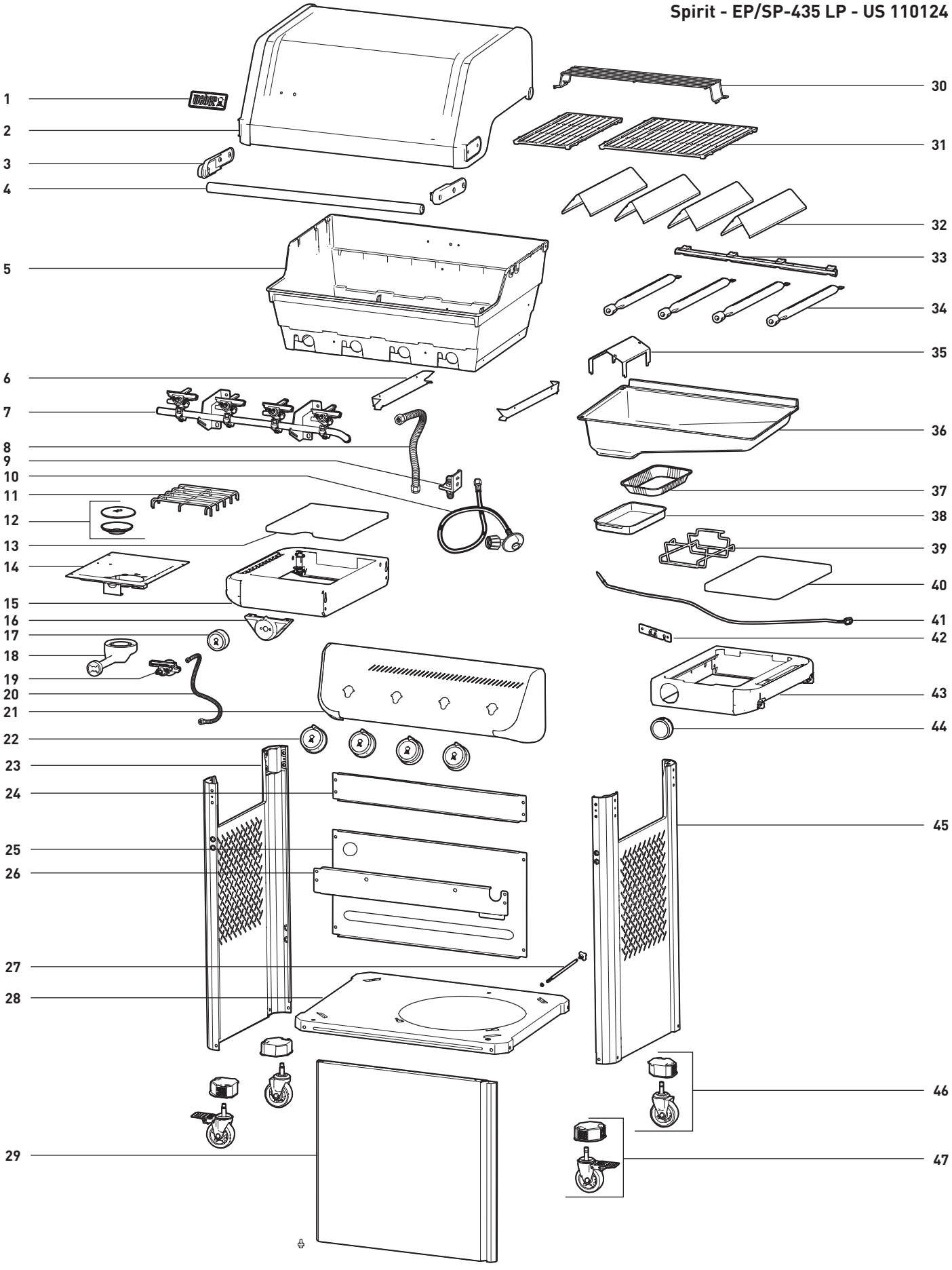

weber.com

CALL CUSTOMER SERVICE

If you are still experiencing any problems, contact the Customer Service Representative in your area using the contact information on weber.com.

PROBLEMS? QUESTIONS? Do Not Return Product to the Store. We Can Help.

If you have questions about the assembly, use, or maintenance of your grill or need replacement parts, please contact Weber Customer Service. The serial number and model number can be found on the cover of your owner's manual and will be necessary for all service calls.

U.S.:	Canada:	Mexico:
1-800-446-1071	1-800-446-1071	800 0093237

© 2026 Designed and engineered by Weber-Stephen Products LLC, 1415 S. Roselle Road, Palatine, Illinois 60067 USA.